NEW

NTA COMFORT

DVGW CERT Anschlusssicher W 540

Drinking water separation stations

Field of application
- Drinking water separation
- Water supply units
- Irrigation units
- Laboratory water supply units

Drinking water mains separation units from the NTA Comfort range prevent the medium from flowing back into the drinking water pipe from domestic water systems connected behind it. Thanks to safety devices in accordance with DIN EN 1717, the drinking water is protected against contamination.

Design
These units are designed with a 240 litre pressureless storage tank. The compact 750 x 650 mm base ensures space-saving installation. Safe drinking water separation is guaranteed by hygiene compliance according to VDI 6023 as well as safety devices according to DIN EN 1717. The problem-free connection rounds off a compact, ready-to-connect and user-friendly drinking water separation station. A fully automatic frequency-controlled pressure boosting system is also included in the delivery.

Motor
Protection class ..... IP 55
Class of insulation ..... F
Voltage ..... 1~ 230 V ± 10 %
3~ 400/230 V ± 10 %
Motor speed ..... 2850 rpm
Frequency ..... 50 Hz

Technical data
Flow rate ..... Q up to max. 9 m³/h
Total dynamic head ..... H up to max. 65 m
Fluid temperature ..... t up to max. 20 °C
Operating pressure ..... p up to max. 10 bar
Inlet pressure (rec.) ..... p min. 1 bar up to max. 6 bar

Pumped fluid
Clear fluids which don't chemically and mechanically attack the unit materials.

Materials used
Storage tank ..... PE
Magnetic valve ..... brass
Ball bearing ..... stainless steel AISI CF8M
Pump housing ..... stainless steel AISI 304
Impellers ..... stainless steel AISI 304
O-Ringe ..... EPDM
Pump shaft ..... stainless steel AISI 303
Mechanical seal ..... carbon/SiC/EPDM
Base frame ..... copper alloy
Pipework ..... stainless steel AISI 316Ti

Type key
NTA AE-M 4-70/240
NTA ..... unit type
AE ..... frequency-controlled
M (T) ..... M = AC
D = DC
4 ..... pump size
70 ..... number of stages x 10
240 ..... storage tank dimensions

NTA COMFORT

Characteristics

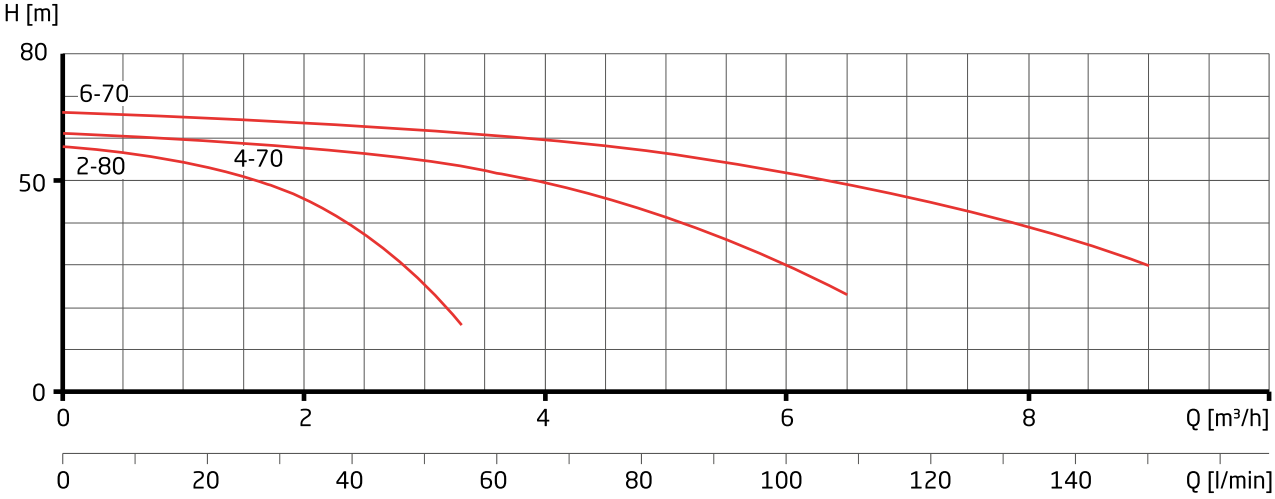

Technical data

Type	Inlet/pressure connection (Rp/R)	Power output P_2 (kW)	Input voltage	Rated current (A) 1 x 230 V	Input voltage	Rated current (A) 3 x 400 V	Approx. Weight (kg)
NTA AE-M (T) 2-80/240	1/1 ¼	0.55	1~ 230 V	2.10	3~ 400 V	1.20	78.0
NTA AE-M (T) 4-70/240	1/1 ¼	1.10	1~ 230 V	4.00	3~ 400 V	2.30	81.0
NTA AE-M (T) 6-70/240	1/1 ¼	1.50	1~ 230 V	5.50	3~ 400 V	3.20	83.0

Order information

Type	Article no.	Flow rate (m³/h)	Target pressure (bar)
NTA AE-M 2-80/240	561.0208.503	2.0	4.0
NTA AE-M 4-70/240	561.0407.502	4.0	4.0
NTA AE-M 6-70/240	561.0607.502	6.0	4.0
NTA AE-T 2-80/240	561.0208.513	2.0	4.0
NTA AE-T 4-70/240	561.0407.512	4.0	4.0
NTA AE-T 6-70/240	561.0607.512	6.0	4.0

Dimensions

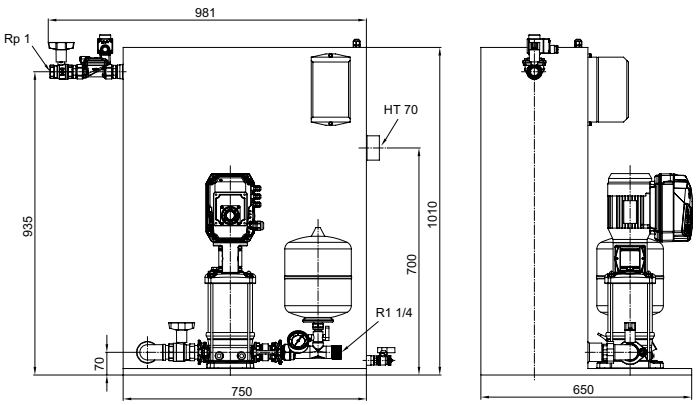

Your benefits

- Space-saving 750 x 650 mm base
- Comfortable Aquacell AE-M (T) pressure boosting system frequency controlled
- Stainless steel ball valve with DVGW approval
- Magnetic valve with shock absorber, approved for drinking water
- Stagnation in the drinking water pipeline is avoided by regular flushing at least every 72 hours
- Problem-free 230 V connection (at NTA AE-T 400 V)