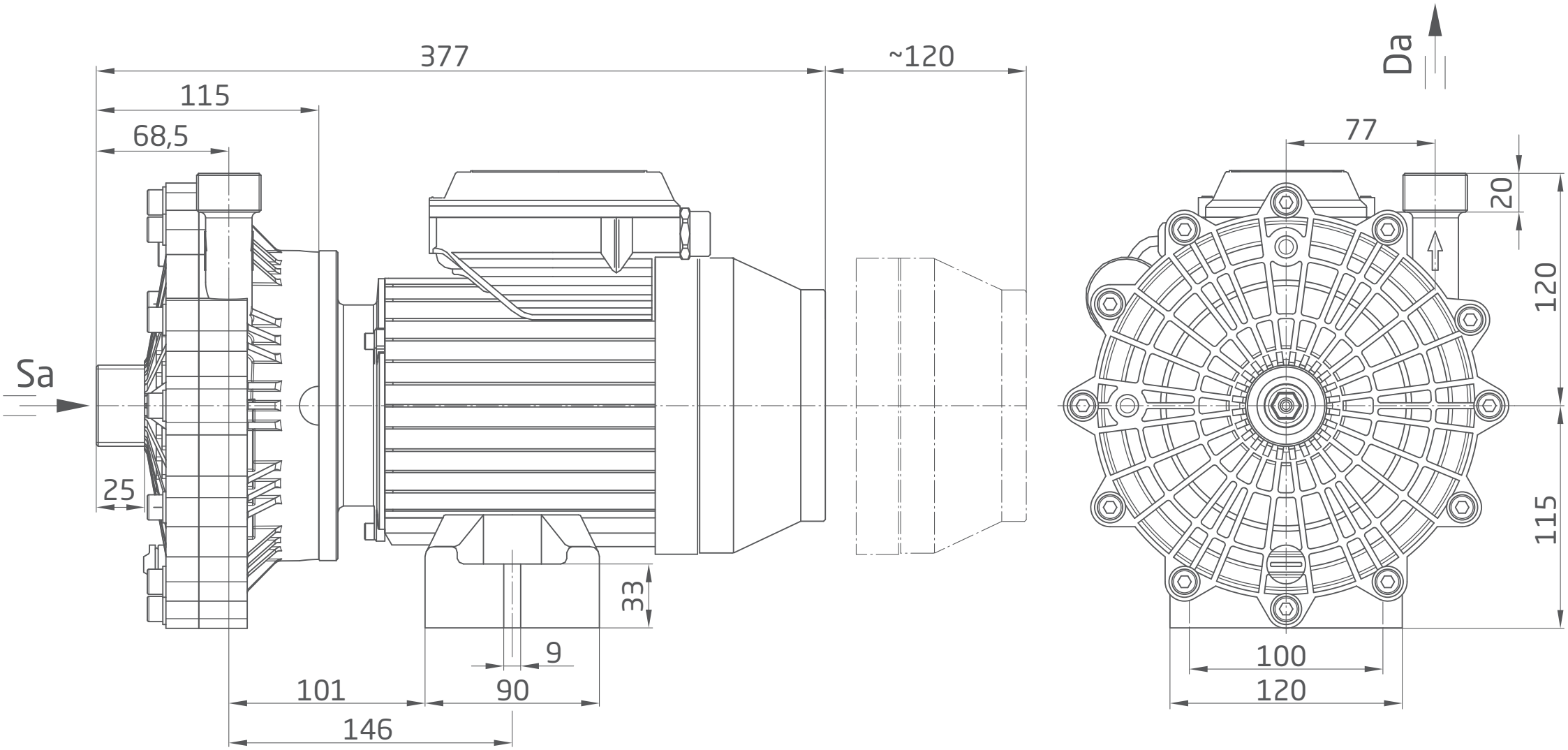BADU 73-1