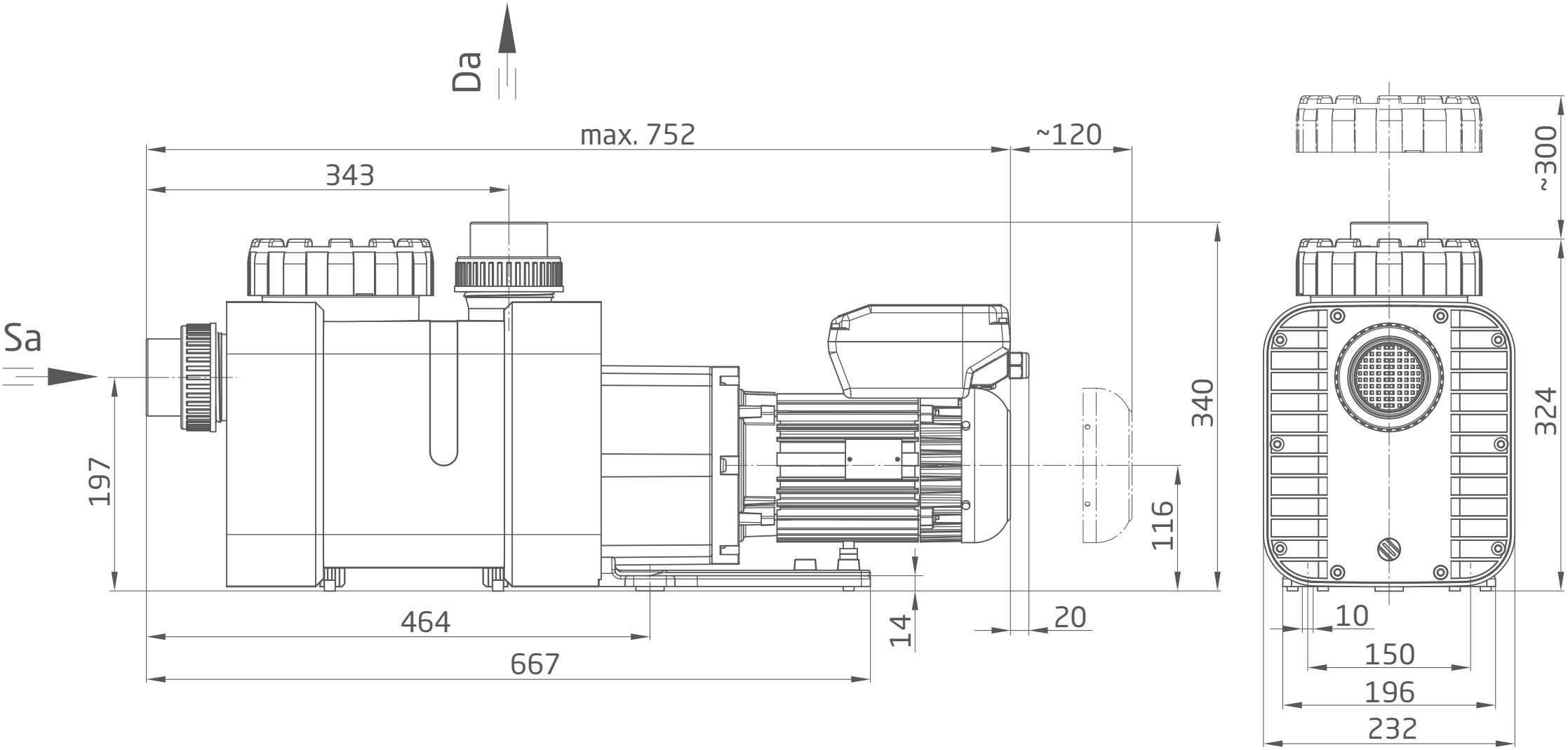BADU Delta-MK Eco VS