INOVA NH II

Heating circulation pumps

Field of application
- Warm water heating for all systems
- For one and two family houses
- Industrial circulation units
- Air conditioning units
- Closed cooling circuits

Design
Wet rotor circulation pump with blocking-current proof synchronous motor and integrated electronic control for stepless performance adaptation. Either Δp-c (constant differential pressure), Δp-v (variable differential pressure) or constant speed with three stages.

NH:
- Standard high-efficiency pump
- Control module with LED display for simple adjustment of the set values and the type of control
- Display of the current power consumption
- ErP conform, EEI ≤ 0.20
- Min. power consumption only 4 W
- Self-ventilating
- Faster electronic connection via connector plug
- Including heat insulation shell

Motor
Protection class ..... IP X2D
Class of insulation ..... F
Voltage ..... 1~ 230 V ± 10 %
Motor speed ..... 2850 rpm
Frequency ..... 50 Hz

Technical data
Flow rate ..... Q up to max. 4.8 m³/h
Total dynamic head ..... H up to max. 6 mWs
Fluid temperature ..... -10 °C to max. 95 °C
Operating pressure ..... p up to max. PN 6

Pumped fluid
Heating water according to VDI 2035.
Water/glycol mixture in maximum ratio 1:1.

Materials used
Pump housing ..... EN-GJL 200 (cast iron)
Impeller ..... plastic
Pump shaft ..... stainless steel
Plain bearing ..... carbon, metal impregnated
O-rings ..... EPDM
Can ..... stainless steel

Type key
INOVA NH II 25/60
INOVA ..... circulation pump
NH II ..... pump type
25 ..... pipework dimension
60 ..... max. dynamic head

INOVA NH II

Δp-c characteristics

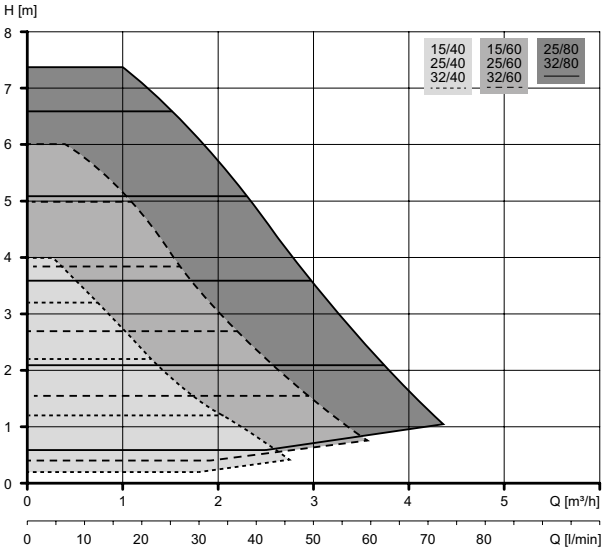

Δp-c characteristics

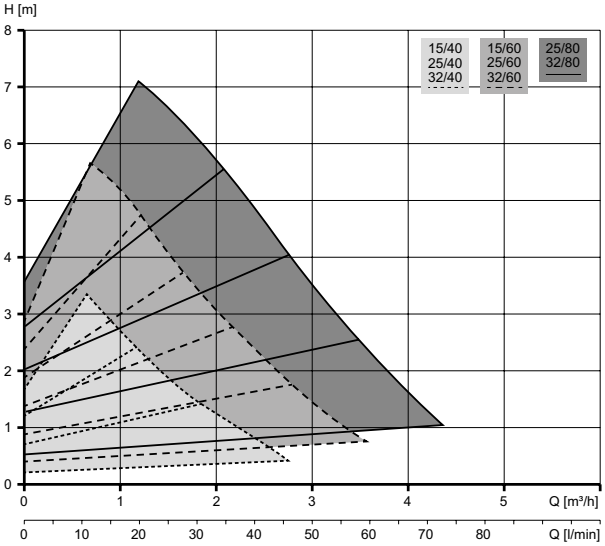

Characteristics constant speed with three stages

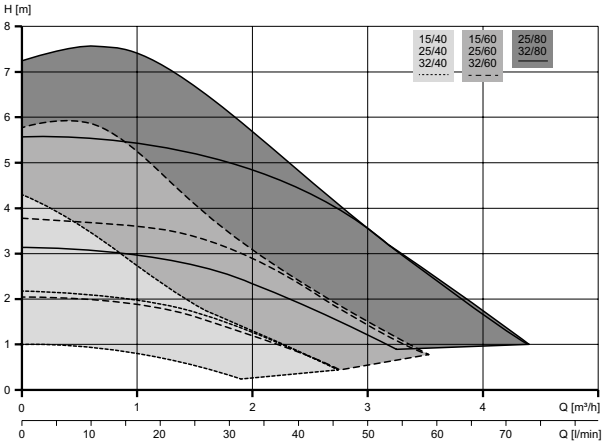

INOVA NH II

Technical data

Type	Connections	Installation length (mm)	Energy efficiency index EEI	Min-max power consumption (W)	Rated current Imax. 1~ 230 V (A)	Weight (kg)
NH II 15/40	1	130	EEI ≤ 0.20-Part 2	4 - 20	0.26	2.20
NH II 25/40	1 ½	180	EEI ≤ 0.20-Part 2	4 - 20	0.26	2.30
NH II 32/40	2	180	EEI ≤ 0.20-Part 2	4 - 20	0.26	2.40
NH II 15/60	1	130	EEI ≤ 0.20-Part 2	4 - 40	0.44	2.20
NH II 25/60	1 ½	180	EEI ≤ 0.20-Part 2	4 - 40	0.44	2.30
NH II 32/60	2	180	EEI ≤ 0.20-Part 2	4 - 40	0.44	2.40
NH II 25/80	1 ½	180	EEI ≤ 0.23-Part 2	4 - 75	0.70	2.30
NH II 32/80	2	180	EEI ≤ 0.23-Part 2	4 - 75	0.70	2.50

Order information

Type	Article no.
NH II 15/40	663.1540.238
NH II 25/40	663.2540.238
NH II 32/40	663.3240.238
NH II 15/60	663.1560.238
NH II 25/60	663.2560.238
NH II 32/60	663.3260.238
NH II 25/80	663.2580.238
NH II 32/80	663.3280.238
Angled connector (optional)	659.0000.003

INOVA NH II

Dimensions

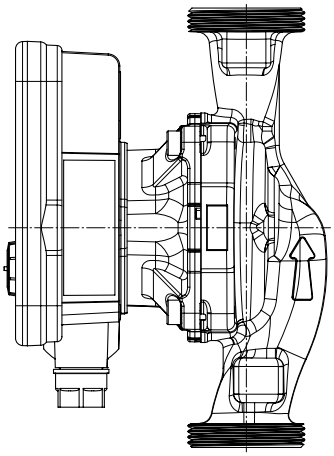

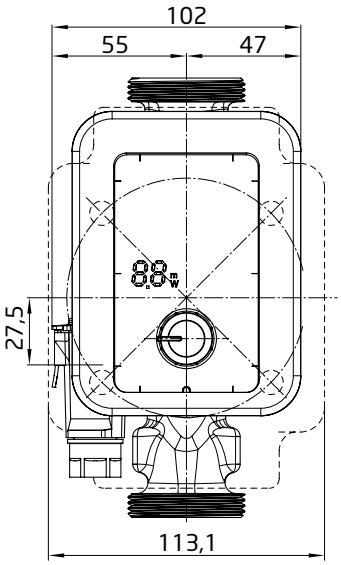

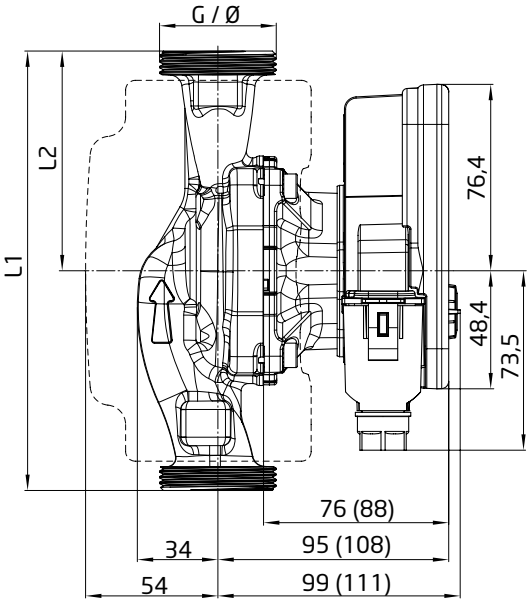

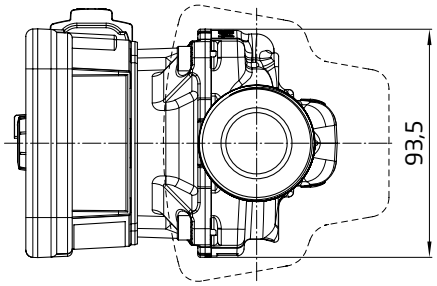

Maße in Klammern NH II 25/80 und 32/80
Dimensions in brackets NH II 25/80 and 32/80

MODEL	DN15	DN25	DN32
G	1"	1"1/2	2"
Ø	33,3	47,8	59,6
L1	130	180	180
L2	65	90	90