SPECK pumpen

2020

Pump technologies and solutions ...

domestic and industrial technology

speck pumpen

experience technology

Move liquids safely.

What sounds so easy depends crucially on experience and know-how.

SPECK Pumpen has convincing technologies and solutions:

Powerful and efficient pumps for safe and durable use

with the quality and reliability of an owner-managed company.

SPECK Pumpen - don't settle for less ...

Detailed information regarding our products can be found at speck-pumps.com.
Alternatively contact our SPECK Pumpen team at info@speck-pumps.com.

CONTENTS

WATER SUPPLY 3

WATER DISPOSAL 171

HEATING 183

SERVICE 197

Current SPECK Pumpen news ...

speck-pumps.com YouTube.com facebook.com twitter.com

WATER SUPPLY

Pressure boosting units	4
Drinking water supply/grid disconnection/ extinguishing water supply systems	30
Vertical pumps	42
Horizontal pumps	76
Pump controls	94
Water extraction	104
Rainwater utilisation	160

Pressure boosting

Product overview

Aquacell AE-M
Performance: 1 to 6 m³/h
Page 6

Aquacell A
Performance: 1 to 160 m³/h
Page 8

Aquacell AE
Performance: 1 to 160 m³/h
Page 8

Multicell
Performance: 1 to 960 m³/h
Page 18

AQUACELL AE-M

Pressure boosting units

Field of application
– Drinking water supply
– Process water supply
– Air conditioning units
– Irrigation

Design
The units are turned on and off automatically via a pressure switch situated on the discharge side.
An 18 l diaphragm pressure vessel is installed as a control in the pressure line. An electrical dry running protection is integrated. The speed control is carried out via a frequency converter fitted onto the motor and including LED display and keypad. Bluetooth monitoring is available via an app on the smartphone. Supplied ready to plug in with 1.5 m cable and plug.

Motor
Protection class ..... IP 55
Class of insulation ..... F
Voltage ..... 1~ 230 V ± 10 %
Speed ..... 2850 rpm
Frequency ..... 50 Hz

Technical data
Flow rate ..... Q up to max. 6 m³/h
Total dynamic head ..... H up to max. 65 m
Fluid temperature ..... t up to max. 50 °C
Operating pressure ..... p up to max. 10 bar

Pumped fluid
Clear, moderately aggressive fluids, which don't chemically and mechanically attack the pump materials.

Materials used
Pump housing ..... stainless steel AISI 304
Impellers ..... stainless steel AISI 304
O-rings ..... EPDM
Pump shaft ..... stainless steel AISI 303
Mechanical seal ..... carbon/SiC/EPDM
Fittings ..... copper alloy
Pipework ..... stainless steel AISI 316Ti

Type key
Aquacell AE-M 4-70
Aquacell ..... unit type
AE ..... frequency controlled
M ..... frequency converter type
4 ..... pump size
70 ..... number of stages x 10

AQUACELL AE-M

Characteristics

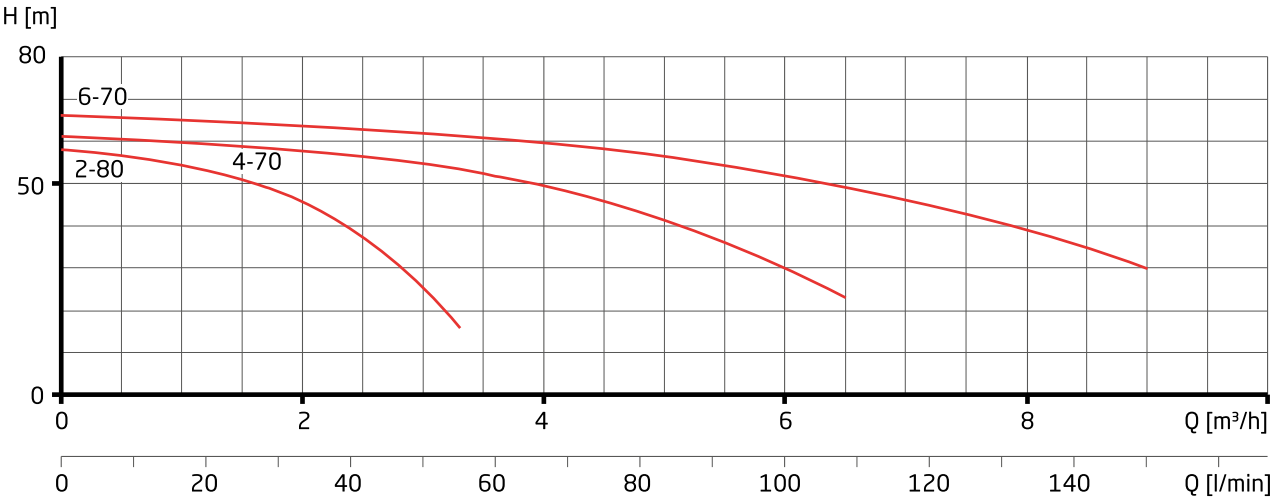

Technical data

Type	Inlet connection (Rp)	Outlet connection (R)	Power output P_2 (kW)	Rated current (A) 1x 230 V	Approx. weight (kg)
AE-M 2-80	1 ¼	1 ¼	0.55	2.60	38.00
AE-M 4-70	1 ¼	1 ¼	1.10	5.00	41.00
AE-M 6-70	1 ¼	1 ¼	1.50	7.50	43.00

Order information

Type	Article no.	Flow rate (m³/h)	Target pressure (bar)	Net RRP	Gross RRP
AE-M 2-80	561.0208.601	**2.0**	**4.0**	**2,313.45 €**	2,753.00 €
AE-M 4-70	561.0407.601	**4.0**	**4.0**	**2,370.59 €**	2,821.00 €
AE-M 6-70	561.0607.601	**6.0**	**4.0**	**2,546.22 €**	3,030.00 €

Dimensions

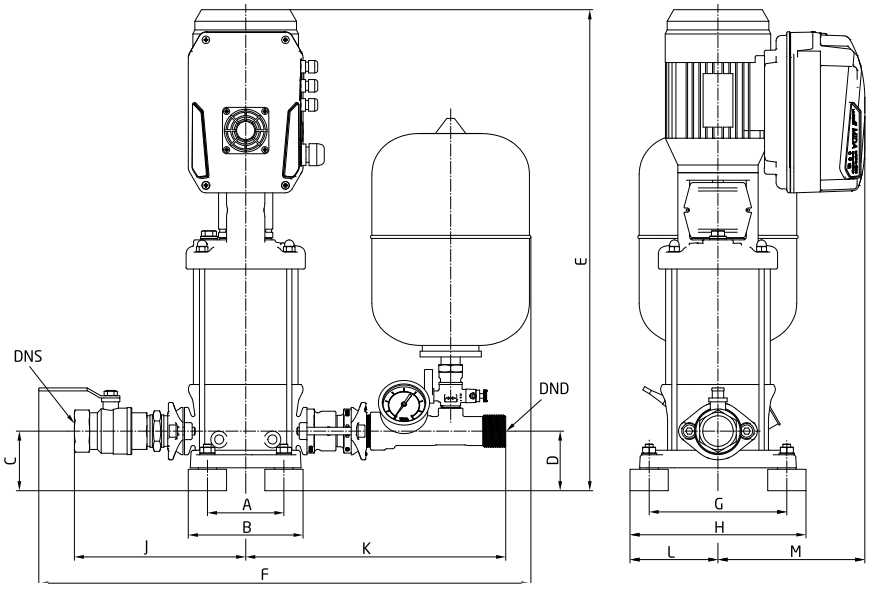

Type	A	B	C	D	E	F	G	H	J	K	L	M
AE-M 2-80	100	150	78	78	669	643,5	180	230	224	340	115	192
AE-M 4-70	100	150	78	78	668	643,5	180	230	224	340	115	192
AE-M 6-70	100	150	78	78	720	643,5	180	230	224	340	115	192

AQUACELL A/AE

Pressure boosting units

Field of application
– Drinking water supply
– Industrial water supply
– Process water supply
– Air conditioning units
– Irrigation

Design
Aquacell A
With a constant speed, non-self-priming, staged centrifugal pump.

Aquacell AE
With a non-self-priming, staged centrifugal pump and speed regulation (frequency converter).

Motor
Protection class ..... IP 55
Class of insulation ..... F
Voltage ..... 3~ 230/400 V ± 10 %
Speed ..... 2850 rpm
Frequency ..... 50 Hz

Technical data
Flow rate ..... Q up to max. 160 m³/h
Total dynamic head ..... H up to max. 250 m
Fluid temperature ..... t up to max. 50 °C
Operating pressure ..... p up to max. 25 bar

Pumped fluid
Clear, moderately aggressive fluids, which don't chemically and mechanically attack the pump materials.

Materials used
Pump housing ..... stainless steel AISI 304
Impellers ..... stainless steel AISI 304
O-rings ..... EPDM
Pump shaft ..... stainless steel AISI 303
Mechanical seal ..... carbon/SiC/EPDM
Fittings ..... copper alloy
Pipework ..... stainless steel AISI 316Ti
Base frame ..... stainless steel AISI 304

Type key
Aquacell AE 4-70
Aquacell ..... unit type
AE ..... frequency controlled
4 ..... pump size
70 ..... number of stages x 10

Special editions
– Special voltages
– Special elastomers
– Special mechanical seals
– Higher fluid temperatures
– Larger units

AQUACELL A/AE

Characteristics

A/AE 2-30 to 2-100

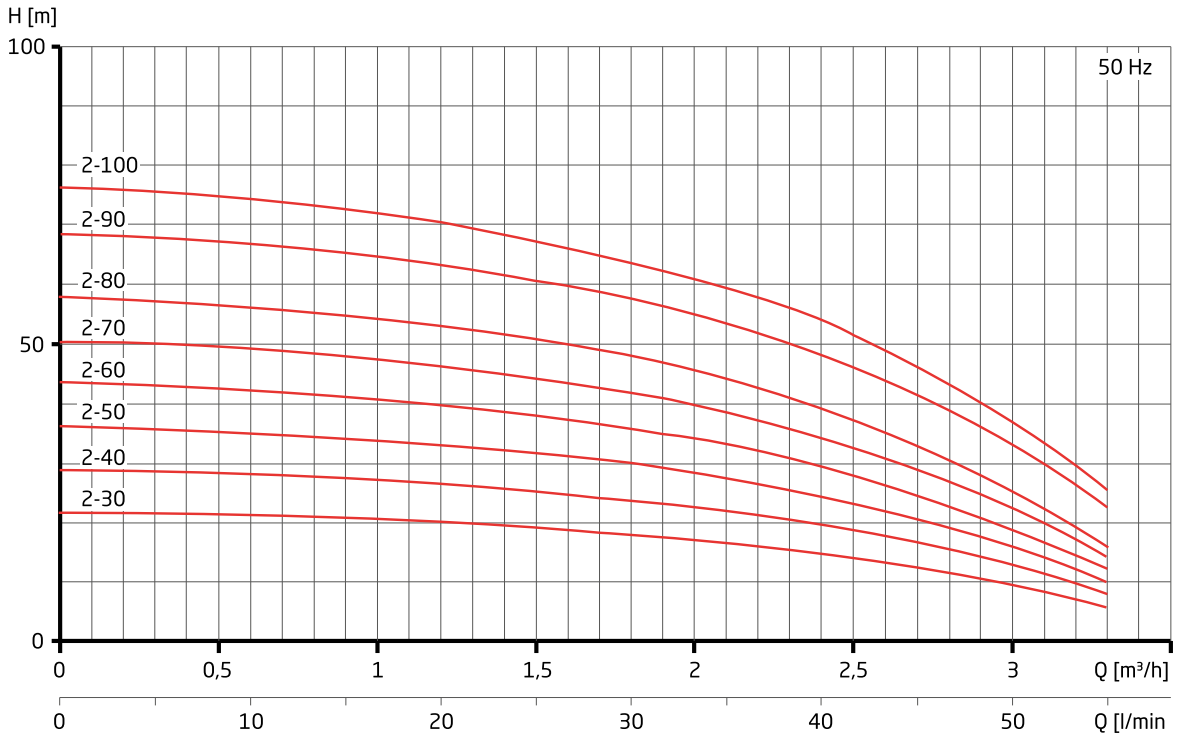

A/AE 4-30 to 4-100

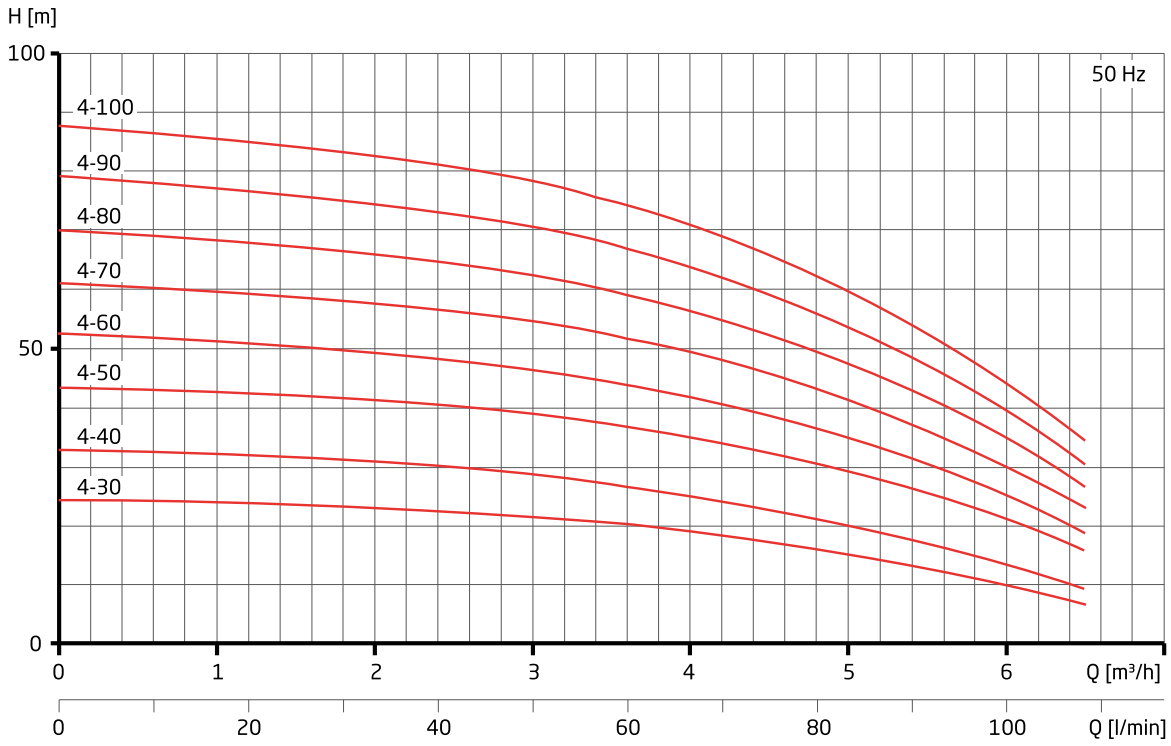

AQUACELL A/AE

Characteristics

A/AE 6-30 to 6-100

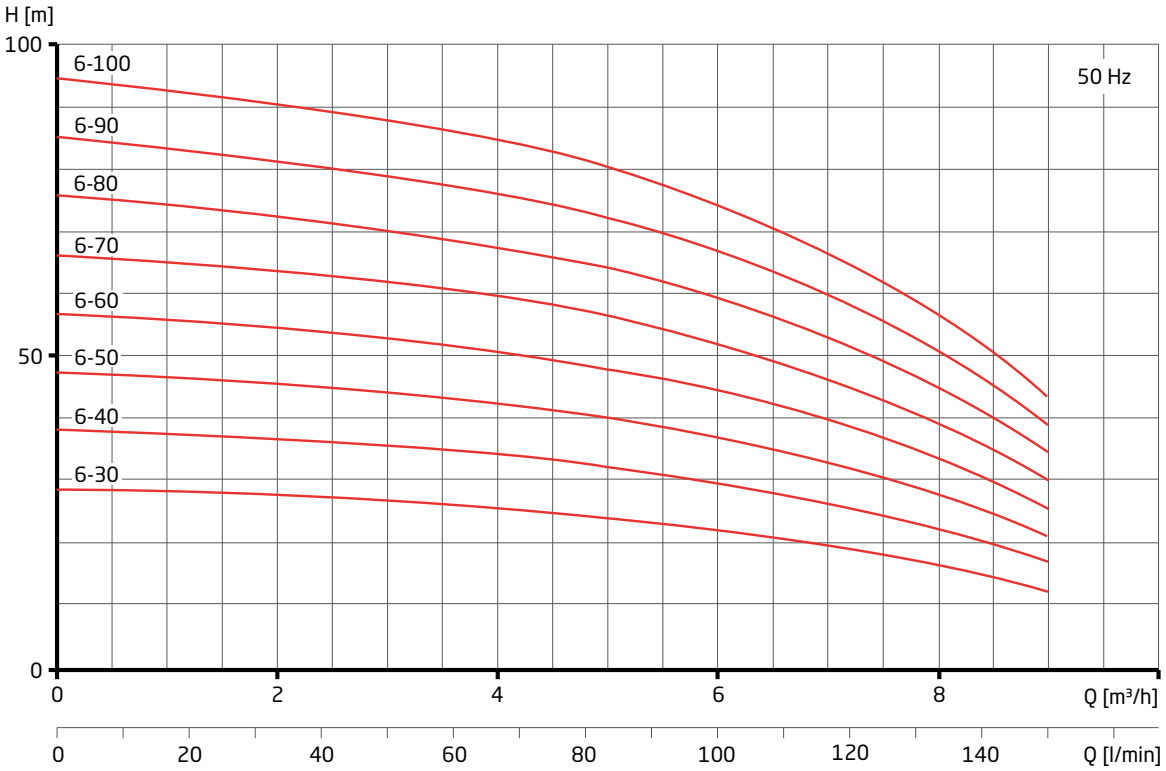

A/AE 10-30 to 10-100

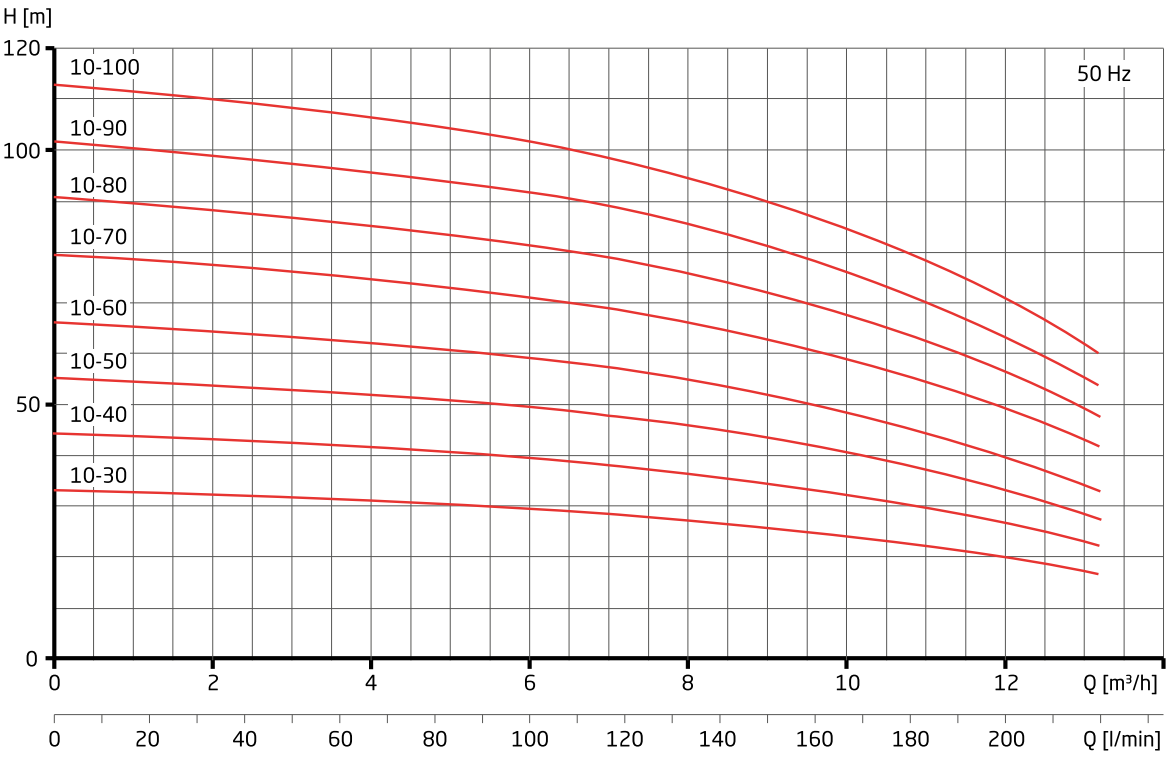

AQUACELL A/AE

Characteristics

A/AE 15-20 to 15-100

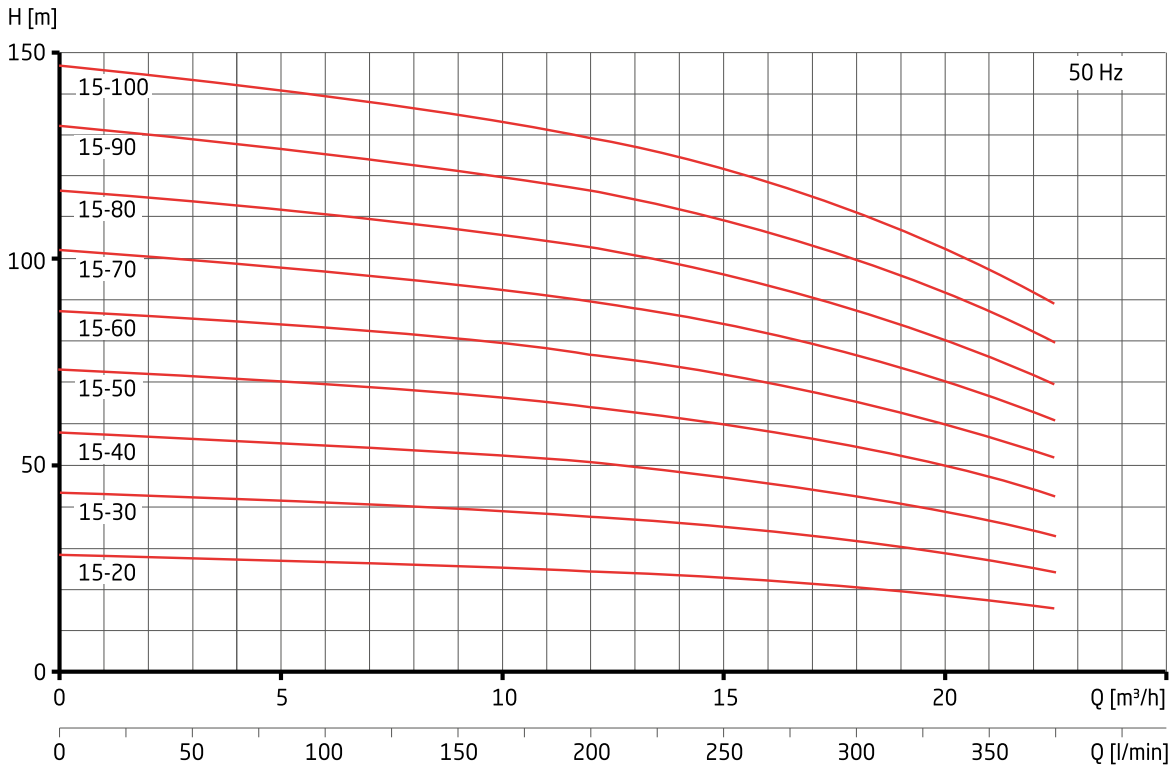

AQUACELL A/AE

Technical data

Aquacell A/AE 2-30 to A/AE 15-100

Type	Inlet/Outlet connection (Rp)	Average flow rate (m^3/h)	Operating/target pressure (bar)	Power output P_2 A/AE (kW)	Rated current 3~ 400 V A/AE (A)	Approx. weight (kg)
A/AE 2-30	1/1	2.50	1.40	0.37/0.75	0.95/1.80	30.00
A/AE 2-40	1/1	2.50	1.80	0.37/0.75	0.95/1.80	32.00
A/AE 2-50	1/1	2.50	2.40	0.37/0.75	0.95/1.80	33.00
A/AE 2-60	1/1	2.50	2.80	0.55/0.75	1.20/1.80	35.00
A/AE 2-70	1/1	2.50	3.40	0.55/0.75	1.20/1.80	35.00
A/AE 2-80	1/1	2.50	3.70	0.55/0.75	1.20/1.80	38.00
A/AE 2-90	1/1	2.50	4.60	0.75/0.75	1.80/1.80	39.00
A/AE 2-100	1/1	2.50	5.20	0.75/0.75	1.80/1.80	39.00
A/AE 4-30	1 ¼/1 ¼	4.00	1.90	0.55/0.75	1.20/1.80	33.00
A/AE 4-40	1 ¼/1 ¼	4.00	2.60	0.55/0.75	1.20/1.80	34.00
A/AE 4-50	1 ¼/1 ¼	4.00	3.50	0.75/0.75	1.80/1.80	36.00
A/AE 4-60	1 ¼/1 ¼	4.00	4.30	1.10/1.10	2.30/2.30	37.00
A/AE 4-70	1 ¼/1 ¼	4.00	4.90	1.10/1.10	2.30/2.30	37.00
A/AE 4-80	1 ¼/1 ¼	4.00	5.60	1.50/1.50	3.20/3.20	43.00
A/AE 4-90	1 ¼/1 ¼	4.00	6.40	1.50/1.50	3.20/3.20	44.00
A/AE 4-100	1 ¼/1 ¼	4.00	7.20	1.50/1.50	3.20/3.20	44.00
A/AE 6-30	1 ¼/1 ¼	6.00	2.20	0.75/0.75	1.80/1.80	36.00
A/AE 6-40	1 ¼/1 ¼	6.00	2.90	1.10/1.10	2.30/2.30	36.00
A/AE 6-50	1 ¼/1 ¼	6.00	3.70	1.10/1.10	2.30/2.30	37.00
A/AE 6-60	1 ¼/1 ¼	6.00	4.40	1.50/1.50	3.20/3.20	43.00
A/AE 6-70	1 ¼/1 ¼	6.00	5.30	1.50/1.50	3.20/3.20	43.00
A/AE 6-80	1 ¼/1 ¼	6.00	5.90	2.20/2.20	4.60/4.60	45.00
A/AE 6-90	1 ¼/1 ¼	6.00	6.60	2.20/2.20	4.60/4.60	45.00
A/AE 6-100	1 ¼/1 ¼	6.00	7.40	2.20/2.20	4.60/4.60	46.00
A/AE 10-30	2/1 ½	8.00	2.70	1.10/1.10	2.30/2.30	51.00
A/AE 10-40	2/1 ½	8.00	3.70	1.50/1.50	3.20/3.20	54.00
A/AE 10-50	2/1 ½	8.00	4.60	2.20/2.20	4.60/4.60	58.00
A/AE 10-60	2/1 ½	8.00	5.50	2.20/2.20	4.60/4.60	60.00
A/AE 10-70	2/1 ½	8.00	6.60	3.00/3.00	5.80/5.80	66.00
A/AE 10-80	2/1 ½	8.00	7.60	3.00/3.00	5.80/5.80	68.00
A/AE 10-90	2/1 ½	8.00	8.50	4.00/4.00	7.40/7.40	75.00
A/AE 10-100	2/1 ½	8.00	9.50	4.00/4.00	7.40/7.40	76.00
A/AE 15-20	2/2	15.00	2.30	2.20/2.20	4.60/4.60	66.00
A/AE 15-30	2/2	15.00	3.50	3.00/3.00	5.80/5.80	71.00
A/AE 15-40	2/2	15.00	4.70	4.00/4.00	7.40/7.40	80.00
A/AE 15-50	2/2	15.00	6.00	5.50/5.50	10.00/10.00	108.00
A/AE 15-60	2/2	15.00	7.30	5.50/5.50	10.00/10.00	114.00
A/AE 15-70	2/2	15.00	8.50	7.50/7.50	13.30/13.30	123.00
A/AE 15-80	2/2	15.00	9.70	7.50/7.50	13.30/13.30	124.00
A/AE 15-90*	2/2	15.00	10.90	11.00/11.00	19.30/19.30	178.00
A/AE 15-100*	2/2	15.00	12.20	11.00/11.00	19.30/19.30	178.00

* Frequency converter not integrated in the motor (AE version)

AQUACELL A/AE

Order information

Aquacell AE 2-30 to AE 15-100

Type	Article no.	Net RRP	Gross RRP	Type	Article no.	Net RRP	Gross RRP
A 2-30	562.1000.000	1,543.70 €	1,837.00 €	AE 2-30	562.1001.000	2,684.03 €	3,194.00 €
A 2-40	562.2000.000	1,580.67 €	1,881.00 €	AE 2-40	562.2001.000	2,715.13 €	3,231.00 €
A 2-50	562.3000.000	1,620.17 €	1,928.00 €	AE 2-50	562.3001.000	2,737.82 €	3,258.00 €
A 2-60	562.4000.000	1,646.22 €	1,959.00 €	AE 2-60	562.4001.000	2,779.83 €	3,308.00 €
A 2-70	562.5000.000	1,667.23 €	1,984.00 €	AE 2-70	562.5001.000	2,815.13 €	3,350.00 €
A 2-80	562.6000.000	1,690.76 €	2,012.00 €	AE 2-80	562.6001.000	2,831.93 €	3,370.00 €
A 2-90	562.7000.000	1,721.01 €	2,048.00 €	AE 2-90	562.7001.000	2,847.06 €	3,388.00 €
A 2-100	562.8000.000	1,756.30 €	2,090.00 €	AE 2-100	562.8001.000	2,905.88 €	3,458.00 €
A 4-30	560.1000.000	1,610.92 €	1,917.00 €	AE 4-30	560.1001.000	2,712.61 €	3,228.00 €
A 4-40	560.2000.000	1,657.14 €	1,972.00 €	AE 4-40	560.2001.000	2,754.62 €	3,278.00 €
A 4-50	560.3000.000	1,718.49 €	2,045.00 €	AE 4-50	560.3001.000	2,775.63 €	3,303.00 €
A 4-60	560.4000.000	1,773.11 €	2,110.00 €	AE 4-60	560.4001.000	2,809.24 €	3,343.00 €
A 4-70	560.5000.000	1,788.24 €	2,128.00 €	AE 4-70	560.5001.000	2,825.21 €	3,362.00 €
A 4-80	560.6000.000	1,833.61 €	2,182.00 €	AE 4-80	560.6001.000	2,976.47 €	3,542.00 €
A 4-90	561.0409.000	1,939.50 €	2,308.00 €	AE 4-90	561.0409.500	3,010.92 €	3,583.00 €
A 4-100	560.7000.000	2,006.72 €	2,388.00 €	AE 4-100	560.7001.000	3,078.99 €	3,664.00 €
A 6-30	561.1000.000	1,680.67 €	2,000.00 €	AE 6-30	561.1001.000	2,763.03 €	3,288.00 €
A 6-40	561.2000.000	1,755.46 €	2,089.00 €	AE 6-40	561.2001.000	2,816.81 €	3,352.00 €
A 6-50	561.3000.000	1,791.60 €	2,132.00 €	AE 6-50	561.3001.000	2,853.78 €	3,396.00 €
A 6-60	561.4000.000	1,914.29 €	2,278.00 €	AE 6-60	561.4001.000	3,057.98 €	3,639.00 €
A 6-70	561.5000.000	1,944.54 €	2,314.00 €	AE 6-70	561.5001.000	3,085.71 €	3,672.00 €
A 6-80	561.6000.000	2,000.00 €	2,380.00 €	AE 6-80	561.6001.000	3,314.29 €	3,944.00 €
A 6-90	561.7000.000	2,053.78 €	2,444.00 €	AE 6-90	561.7001.000	3,368.07 €	4,008.00 €
A 6-100	561.8000.000	2,134.45 €	2,540.00 €	AE 6-100	561.8001.000	3,448.74 €	4,104.00 €
A 10-30	564.1000.000	1,935.29 €	2,303.00 €	AE 10-30	564.1001.000	3,010.92 €	3,583.00 €
A 10-40	564.2000.000	2,041.18 €	2,429.00 €	AE 10-40	564.2001.000	3,372.27 €	4,013.00 €
A 10-50	564.3000.000	2,131.45 €	2,753.00 €	AE 10-50	564.3001.000	3,623.53 €	4,312.00 €
A 10-60	564.4000.000	2,385.71 €	2,839.00 €	AE 10-60	564.4001.000	3,670.59 €	4,368.00 €
A 10-70	564.5000.000	2,525.21 €	3,005.00 €	AE 10-70	564.5001.000	3,857.98 €	4,591.00 €
A 10-80	564.6000.000	2,598.32 €	3,092.00 €	AE 10-80	564.6001.000	3,919.33 €	4,664.00 €
A 10-90	564.7000.000	2,766.39 €	3,292.00 €	AE 10-90	561.1009.500	4,176.47 €	4,970.00 €
A 10-100	561.1010.000	2,842.86 €	3,383.00 €	AE 10-100	561.1010.500	4,252.10 €	5,060.00 €
A 15-20	565.0000.000	2,173.95 €	2,587.00 €	AE 15-20	565.0001.000	3,677.31 €	4,376.00 €
A 15-30	565.1000.000	2,280.67 €	2,714.00 €	AE 15-30	565.1001.000	4,041.18 €	4,809.00 €
A 15-40	565.2000.000	3,492.44 €	4,156.00 €	AE 15-40	565.2001.000	4,437.28 €	5,281.00 €
A 15-50	565.3000.000	3,894.96 €	4,635.00 €	AE 15-50	565.3001.000	6,231.93 €	7,416.00 €
A 15-60	565.4000.000	3,965.55 €	4,719.00 €	AE 15-60	565.4001.000	6,327.73 €	7,530.00 €
A 15-70	565.5000.000	4,347.90 €	5,174.00 €	AE 15-70	565.5001.000	6,919.33 €	8,234.00 €
A 15-80	565.6000.000	4,455.46 €	5,302.00 €	AE 15-80	565.6001.000	6,979.83 €	8,306.00 €
A 15-90	561.1509.000	5,091.60 €	6,059.00 €	AE 15-90*	561.1509.500	9,611.76 €	11,438.00 €
A 15-100	565.7000.000	5,184.87 €	6,170.00 €	AE 15-100*	565.7001.000	9,705.04 €	11,549.00 €
Commissioning	INBK					484.03 €	576.00 €

* Frequency converter not integrated in the motor (AE version)

AQUACELL A/AE

Dimensions AQUACELL A

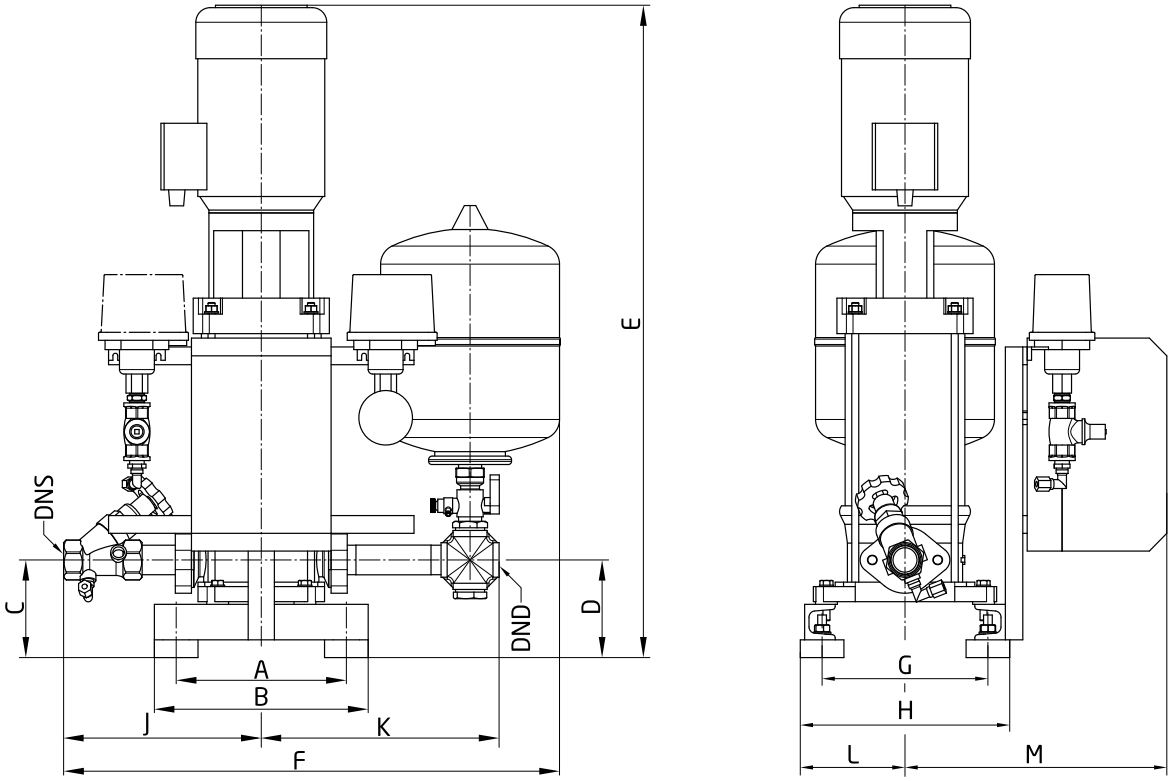

Dimensions AQUACELL AE

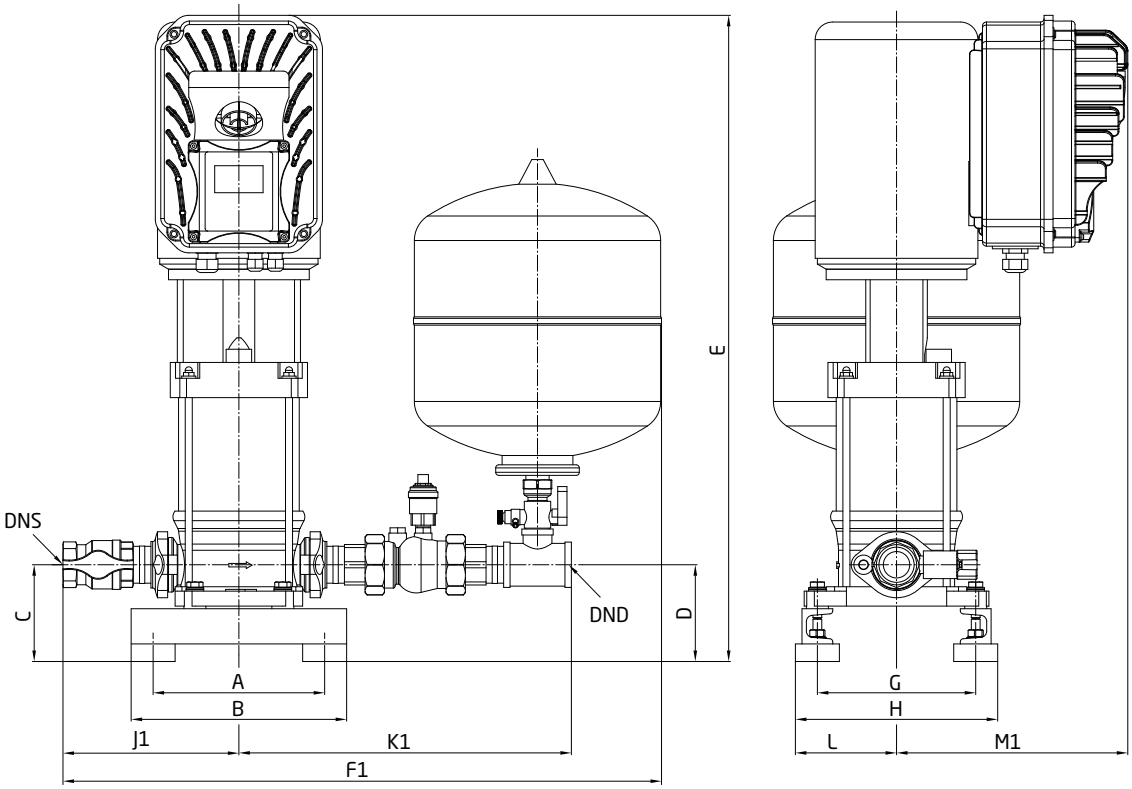

AQUACELL A/AE

Dimensions

Aquacell A 2-30 to 2-100 and Aquacell AE 2-30 to 2-100

Type	A	B	C	D	E	F	F1	G	H	J	J1	K	K1	L	M	M1
A/AE 2-30	195	245	110	110	560	600	595	190	230	245	185	260	340	110	260	265
A/AE 2-40	195	245	110	110	585	600	595	190	230	245	185	260	340	110	260	265
A/AE 2-50	195	245	110	110	605	600	595	190	230	245	185	260	340	110	260	230
A/AE 2-60	195	245	110	110	650	600	595	190	230	245	185	260	340	110	260	230
A/AE 2-70	195	245	110	110	670	600	595	190	230	245	185	260	340	110	260	290
A/AE 2-80	195	245	110	110	700	600	595	190	230	245	185	260	340	110	260	295
A/AE 2-90	195	245	110	110	715	600	595	190	230	245	185	260	340	110	260	310
A/AE 2-100	195	245	110	110	735	600	595	190	230	245	185	260	340	110	260	330

Aquacell A 4-30 to 4-100 and Aquacell AE 4-30 to 4-100

Type	A	B	C	D	E	F	F1	G	H	J	J1	K	K1	L	M	M1
A/AE 4-30	195	245	110	110	585	600	710	190	230	245	190	270	350	110	260	265
A/AE 4-40	195	245	110	110	605	600	710	190	230	245	190	270	350	110	260	265
A/AE 4-50	195	245	110	110	630	600	710	190	230	245	190	270	350	110	260	230
A/AE 4-60	195	245	110	110	680	600	710	190	230	245	190	270	350	110	260	230
A/AE 4-70	195	245	110	110	700	600	710	190	230	245	190	270	350	110	260	290
A/AE 4-80	195	245	110	110	750	600	710	190	230	245	190	270	350	110	260	295
A/AE 4-90	195	245	110	110	770	600	710	190	230	245	190	270	350	110	260	310
A/AE 4-100	195	245	110	110	795	600	710	190	230	245	190	270	350	110	260	330

Aquacell A 6-30 to 6-100 and Aquacell AE 6-30 to 6-100

Type	A	B	C	D	E	F	F1	G	H	J	J1	K	K1	L	M	M1
A/AE 6-30	195	245	110	110	595	600	710	190	230	245	190	270	350	110	260	265
A/AE 6-40	195	245	110	110	650	600	710	190	230	245	190	270	350	110	260	265
A/AE 6-50	195	245	110	110	675	600	710	190	230	245	190	270	350	110	260	230
A/AE 6-60	195	245	110	110	730	600	710	190	230	245	190	270	350	110	260	230
A/AE 6-70	195	245	110	110	755	600	710	190	230	245	190	270	350	110	260	290
A/AE 6-80	195	245	110	110	805	600	710	190	230	245	190	270	350	110	260	295
A/AE 6-90	195	245	110	110	830	600	710	190	230	245	190	270	350	110	260	310
A/AE 6-100	195	245	110	110	855	600	710	190	230	245	190	270	350	110	260	330

Aquacell A 10-30 to 10-100 and Aquacell AE 10-30 to 10-100

Type	A	B	C	D	E	F	F1	G	H	J	J1	K	K1	L	M	M1
A/AE 10-30	195	245	140	140	700	710	785	220	260	320	230	310	400	130	280	265
A/AE 10-40	195	245	140	140	750	710	785	220	260	320	230	310	400	130	280	265
A/AE 10-50	195	245	140	140	805	710	785	220	260	320	230	310	400	130	280	230
A/AE 10-60	195	245	140	140	830	710	785	220	260	320	230	310	400	130	280	230
A/AE 10-70	195	245	140	140	875	710	785	220	260	320	230	310	400	130	280	290
A/AE 10-80	195	245	140	140	905	710	785	220	260	320	230	310	400	130	280	295
A/AE 10-90	195	245	140	140	960	710	785	220	260	320	230	310	400	130	280	310
A/AE 10-100	195	245	140	140	985	710	785	220	260	320	230	310	400	130	280	330

Aquacell A 15-20 to 15-100 and Aquacell AE 15-20 to 15-100

Type	A	B	C	D	E	F	F1	G	H	J	J1	K	K1	L	M	M1
A/AE 15-20	300	400	140	140	735	815	920	280	300	360	315	385	540	140	410	265
A/AE 15-30	300	400	140	140	780	815	920	280	300	360	315	385	540	140	410	265
A/AE 15-40	300	400	140	140	835	815	920	280	300	360	315	385	540	140	410	230
A/AE 15-50	300	400	140	140	1020	815	920	280	300	360	315	385	540	140	410	230
A/AE 15-60	300	400	140	140	1045	815	920	280	300	360	315	385	540	140	410	290
A/AE 15-70	300	400	140	140	1070	815	920	280	300	360	315	385	540	140	410	295
A/AE 15-80	300	400	140	140	1100	815	920	280	300	360	315	385	540	140	410	310
A/AE 15-90	300	400	140	140	1255	815	920	280	300	360	315	385	540	140	410	*
A/AE 15-100	300	400	140	140	1280	815	920	280	300	360	315	385	540	140	410	*

* Dimensions on request

MULTICELL

Pressure boosting units

Field of application
– Drinking water supply
– Industrial water supply
– Process water supply
– Air conditioning units
– Irrigation

Design
With 2 to 6 non-self-priming, staged centrifugal pumps and speed regulation for each pump (frequency converter).

Motor
Protection class ..... IP 55
Class of insulation..... F
Voltage ..... 3~ 230/400 V ± 10 %
Speed..... 2850 rpm
Frequency ..... 50 Hz

Technical data
Flow rate..... Q up to max. 960 m³/h
Total dynamic head ..... H up to max. 250 m
Fluid temperature ..... t up to max. 50 °C
Operating pressure..... p up to max. 25 bar

Pumped fluid
Clear, moderately aggressive fluids, which don't chemically and mechanically attack the pump materials.

Materials used
Pump housing..... stainless steel AISI 304
Impellers..... stainless steel AISI 304
O-rings..... EPDM
Pump shaft ..... stainless steel AISI 303
Mechanical seal..... carbon/SiC/EPDM
Fittings..... copper alloy
Pipework..... stainless steel AISI 316 Ti
Base frame..... stainless steel AISI 304

Type key
Multicell SFE 3/4-70
Multicell ..... unit type
SFE..... frequency controlled
3..... number of pumps
4..... pump size
70..... number of stages x 10

Special editions
– Special voltages
– Special elastomers
– Special mechanical seals
– Higher fluid temperatures
– Larger units

MULTICELL

Characteristics

SFE 1 to 6/2-100

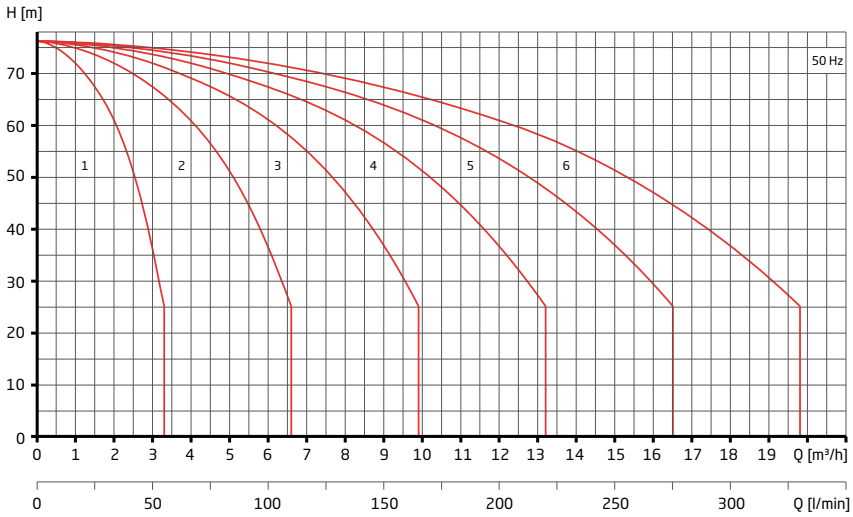

SFE 1 to 6/4-100

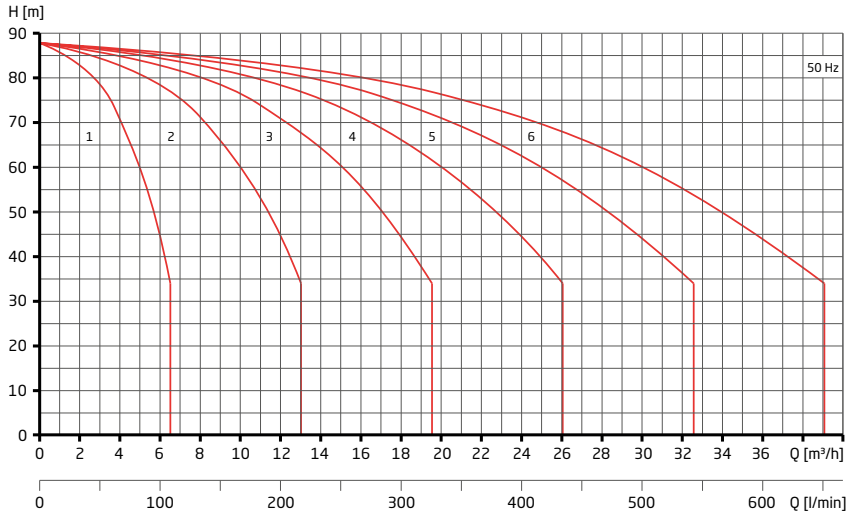

SFE 1 to 6/6-100

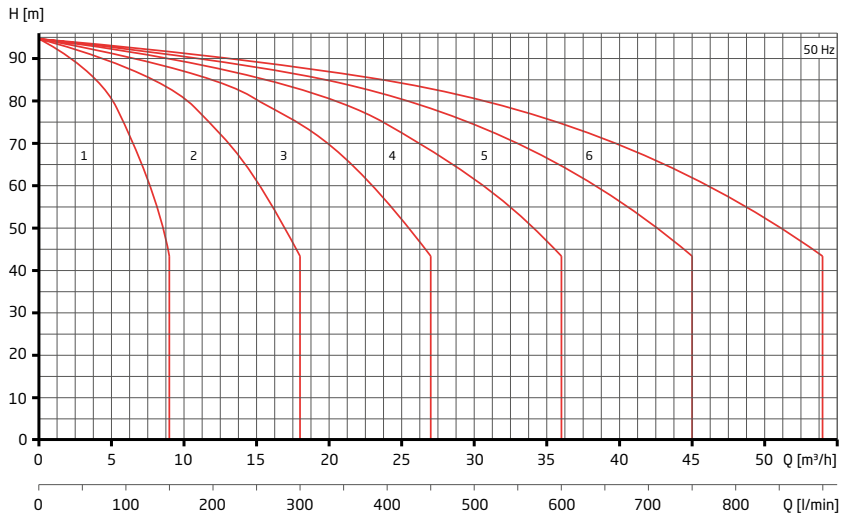

See IN-VB from page 46 for individual characteristics.

MULTICELL

Characteristics

SFE 1 to 6/10-100

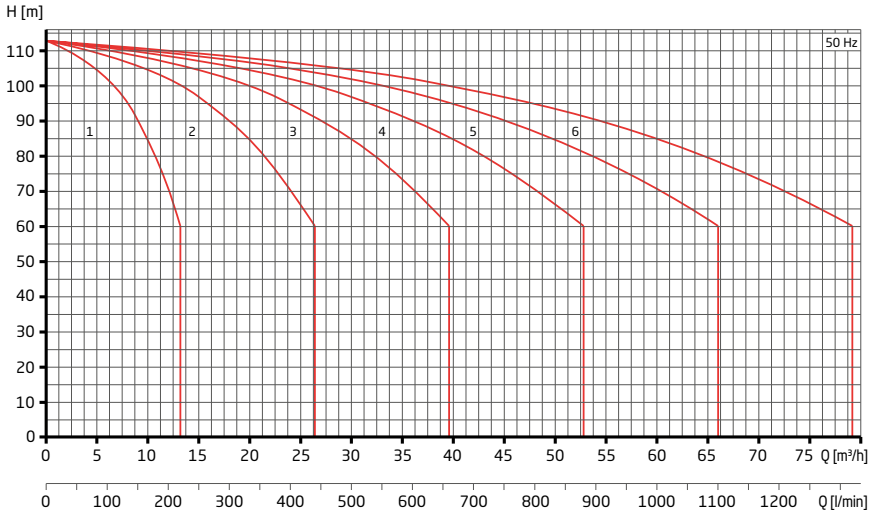

SFE 1 to 6/15-100

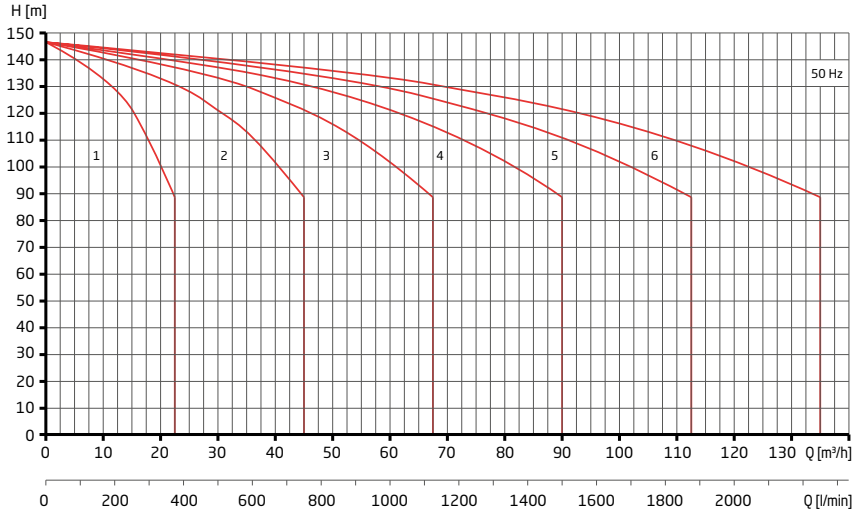

See IN-VB from page 46 for individual characteristics.

MULTICELL

Technical data

Multicell SFE 2-30 to 2-100 with 2 to 6 pumps

Type	Pumps		Inlet/ outlet connection	Average flow rate (m^3/h)	Reserve pump (m^3/h)	Target pressure (bar)	Power output P_2 (kW)	Rated current (A) 3~ 400 V	Approx. weight (kg)
	No.	Type							
SFE 2/2-30	2	IN-VB 2-30	R 2/R 2	2.50	2.50	1.40	0.37	2 x 0.95	140.00
SFE 2/2-40	2	IN-VB 2-40	R 2/R 2	2.50	2.50	1.80	0.37	2 x 0.95	150.00
SFE 2/2-50	2	IN-VB 2-50	R 2/R 2	2.50	2.50	2.40	0.37	2 x 0.95	155.00
SFE 2/2-60	2	IN-VB 2-60	R 2/R 2	2.50	2.50	2.80	0.55	2 x 1.20	165.00
SFE 2/2-70	2	IN-VB 2-70	R 2/R 2	2.50	2.50	3.40	0.55	2 x 1.20	170.00
SFE 2/2-80	2	IN-VB 2-80	R 2/R 2	2.50	2.50	3.70	0.55	2 x 1.20	180.00
SFE 2/2-90	2	IN-VB 2-90	R 2/R 2	2.50	2.50	4.60	0.75	2 x 1.80	183.00
SFE 2/2-100	2	IN-VB 2-100	R 2/R 2	2.50	2.50	5.20	0.75	2 x 1.80	185.00
SFE 3/2-30	3	IN-VB 2-30	R 2/R 2	5.00	2.50	1.40	0.37	3 x 0.95	180.00
SFE 3/2-40	3	IN-VB 2-40	R 2/R 2	5.00	2.50	1.80	0.37	3 x 0.95	195.00
SFE 3/2-50	3	IN-VB 2-50	R 2/R 2	5.00	2.50	2.40	0.37	3 x 0.95	205.00
SFE 3/2-60	3	IN-VB 2-60	R 2/R 2	5.00	2.50	2.80	0.55	3 x 1.20	225.00
SFE 3/2-70	3	IN-VB 2-70	R 2/R 2	5.00	2.50	3.40	0.55	3 x 1.20	230.00
SFE 3/2-80	3	IN-VB 2-80	R 2/R 2	5.00	2.50	3.70	0.55	3 x 1.20	240.00
SFE 3/2-90	3	IN-VB 2-90	R 2/R 2	5.00	2.50	4.60	0.75	3 x 1.80	243.00
SFE 3/2-100	3	IN-VB 2-100	R 2/R 2	5.00	2.50	5.20	0.75	3 x 1.80	245.00
SFE 4/2-30	4	IN-VB 2-30	DN 65/DN 65	7.50	2.50	1.40	0.37	4 x 0.95	205.00
SFE 4/2-40	4	IN-VB 2-40	DN 65/DN 65	7.50	2.50	1.80	0.37	4 x 0.95	220.00
SFE 4/2-50	4	IN-VB 2-50	DN 65/DN 65	7.50	2.50	2.40	0.37	4 x 0.95	235.00
SFE 4/2-60	4	IN-VB 2-60	DN 65/DN 65	7.50	2.50	2.80	0.55	4 x 1.20	250.00
SFE 4/2-70	4	IN-VB 2-70	DN 65/DN 65	7.50	2.50	3.40	0.55	4 x 1.20	260.00
SFE 4/2-80	4	IN-VB 2-80	DN 65/DN 65	7.50	2.50	3.70	0.55	4 x 1.20	275.00
SFE 4/2-90	4	IN-VB 2-90	DN 65/DN 65	7.50	2.50	4.60	0.75	4 x 1.80	280.00
SFE 4/2-100	4	IN-VB 2-100	DN 65/DN 65	7.50	2.50	5.20	0.75	4 x 1.80	285.00
SFE 5/2-30	5	IN-VB 2-30	DN 80/DN 80	10.00	2.50	1.40	0.37	5 x 0.95	225.00
SFE 5/2-40	5	IN-VB 2-40	DN 80/DN 80	10.00	2.50	1.80	0.37	5 x 0.95	245.00
SFE 5/2-50	5	IN-VB 2-50	DN 80/DN 80	10.00	2.50	2.40	0.37	5 x 0.95	260.00
SFE 5/2-60	5	IN-VB 2-60	DN 80/DN 80	10.00	2.50	2.80	0.55	5 x 1.20	290.00
SFE 5/2-70	5	IN-VB 2-70	DN 80/DN 80	10.00	2.50	3.40	0.55	5 x 1.20	300.00
SFE 5/2-80	5	IN-VB 2-80	DN 80/DN 80	10.00	2.50	3.70	0.55	5 x 1.20	320.00
SFE 5/2-90	5	IN-VB 2-90	DN 80/DN 80	10.00	2.50	4.60	0.75	5 x 1.80	325.00
SFE 5/2-100	5	IN-VB 2-100	DN 80/DN 80	10.00	2.50	5.20	0.75	5 x 1.80	330.00
SFE 6/2-30	6	IN-VB 2-30	DN 80/DN 80	12.50	2.50	1.40	0.37	6 x 0.95	250.00
SFE 6/2-40	6	IN-VB 2-40	DN 80/DN 80	12.50	2.50	1.80	0.37	6 x 0.95	275.00
SFE 6/2-50	6	IN-VB 2-50	DN 80/DN 80	12.50	2.50	2.40	0.37	6 x 0.95	295.00
SFE 6/2-60	6	IN-VB 2-60	DN 80/DN 80	12.50	2.50	2.80	0.55	6 x 1.20	350.00
SFE 6/2-70	6	IN-VB 2-70	DN 80/DN 80	12.50	2.50	3.40	0.55	6 x 1.20	365.00
SFE 6/2-80	6	IN-VB 2-80	DN 80/DN 80	12.50	2.50	3.70	0.55	6 x 1.20	390.00
SFE 6/2-90	6	IN-VB 2-90	DN 80/DN 80	12.50	2.50	4.60	0.75	6 x 1.80	398.00
SFE 6/2-100	6	IN-VB 2-100	DN 80/DN 80	12.50	2.50	5.20	0.75	6 x 1.80	405.00

MULTICELL

Technical data

Multicell SFE 4-30 to 4-100 with 2 to 6 pumps

Type	Pumps		Inlet/ Outlet connection	Average flow rate (m^3/h)	Reserve pump (m^3/h)	Target pressure (bar)	Power output P_2 (kW)	Rated current (A) 3~ 400 V	Approx. weight (kg)
	No.	Type							
SFE 2/4-30	2	IN-VB 4-30	R 2/R 2	4.00	4.00	1.90	0.55	2 x 1.20	140.00
SFE 2/4-40	2	IN-VB 4-40	R 2/R 2	4.00	4.00	2.60	0.55	2 x 1.20	150.00
SFE 2/4-50	2	IN-VB 4-50	R 2/R 2	4.00	4.00	3.50	0.75	2 x 1.80	155.00
SFE 2/4-60	2	IN-VB 4-60	R 2/R 2	4.00	4.00	4.30	1.10	2 x 2.30	165.00
SFE 2/4-70	2	IN-VB 4-70	R 2/R 2	4.00	4.00	4.90	1.10	2 x 2.30	170.00
SFE 2/4-80	2	IN-VB 4-80	R 2/R 2	4.00	4.00	5.60	1.50	2 x 3.20	180.00
SFE 2/4-90	2	IN-VB 4-90	R 2/R 2	4.00	4.00	6.40	1.50	2 x 3.20	183.00
SFE 2/4-100	2	IN-VB 4-100	R 2/R 2	4.00	4.00	7.20	1.50	2 x 3.20	185.00
SFE 3/4-30	3	IN-VB 4-30	R 2/R 2	8.00	4.00	1.90	0.55	3 x 1.20	180.00
SFE 3/4-40	3	IN-VB 4-40	R 2/R 2	8.00	4.00	2.60	0.55	3 x 1.20	195.00
SFE 3/4-50	3	IN-VB 4-50	R 2/R 2	8.00	4.00	3.50	0.75	3 x 1.80	205.00
SFE 3/4-60	3	IN-VB 4-60	R 2/R 2	8.00	4.00	4.30	1.10	3 x 2.30	225.00
SFE 3/4-70	3	IN-VB 4-70	R 2/R 2	8.00	4.00	4.90	1.10	3 x 2.30	230.00
SFE 3/4-80	3	IN-VB 4-80	R 2/R 2	8.00	4.00	5.60	1.50	3 x 3.20	240.00
SFE 3/4-90	3	IN-VB 4-90	R 2/R 2	8.00	4.00	6.40	1.50	3 x 3.20	243.00
SFE 3/4-100	3	IN-VB 4-100	R 2/R 2	8.00	4.00	7.20	1.50	3 x 3.20	245.00
SFE 4/4-30	4	IN-VB 4-30	DN 65/DN 65	12.00	4.00	1.90	0.55	4 x 1.20	205.00
SFE 4/4-40	4	IN-VB 4-40	DN 65/DN 65	12.00	4.00	2.60	0.55	4 x 1.20	220.00
SFE 4/4-50	4	IN-VB 4-50	DN 65/DN 65	12.00	4.00	3.50	0.75	4 x 1.80	235.00
SFE 4/4-60	4	IN-VB 4-60	DN 65/DN 65	12.00	4.00	4.30	1.10	4 x 2.30	250.00
SFE 4/4-70	4	IN-VB 4-70	DN 65/DN 65	12.00	4.00	4.90	1.10	4 x 2.30	260.00
SFE 4/4-80	4	IN-VB 4-80	DN 65/DN 65	12.00	4.00	5.60	1.50	4 x 3.20	275.00
SFE 4/4-90	4	IN-VB 4-90	DN 65/DN 65	12.00	4.00	6.40	1.50	4 x 3.20	280.00
SFE 4/4-100	4	IN-VB 4-100	DN 65/DN 65	12.00	4.00	7.20	1.50	4 x 3.20	285.00
SFE 5/4-30	5	IN-VB 4-30	DN 80/DN 80	16.00	4.00	1.90	0.55	5 x 1.20	225.00
SFE 5/4-40	5	IN-VB 4-40	DN 80/DN 80	16.00	4.00	2.60	0.55	5 x 1.20	245.00
SFE 5/4-50	5	IN-VB 4-50	DN 80/DN 80	16.00	4.00	3.50	0.75	5 x 1.80	260.00
SFE 5/4-60	5	IN-VB 4-60	DN 80/DN 80	16.00	4.00	4.30	1.10	5 x 2.30	290.00
SFE 5/4-70	5	IN-VB 4-70	DN 80/DN 80	16.00	4.00	4.90	1.10	5 x 2.30	300.00
SFE 5/4-80	5	IN-VB 4-80	DN 80/DN 80	16.00	4.00	5.60	1.50	5 x 3.20	320.00
SFE 5/4-90	5	IN-VB 4-90	DN 80/DN 80	16.00	4.00	6.40	1.50	5 x 3.20	325.00
SFE 5/4-100	5	IN-VB 4-100	DN 80/DN 80	16.00	4.00	7.20	1.50	5 x 3.20	330.00
SFE 6/4-30	6	IN-VB 4-30	DN 80/DN 80	20.00	4.00	1.90	0.55	6 x 1.20	250.00
SFE 6/4-40	6	IN-VB 4-40	DN 80/DN 80	20.00	4.00	2.60	0.55	6 x 1.20	275.00
SFE 6/4-50	6	IN-VB 4-50	DN 80/DN 80	20.00	4.00	3.50	0.75	6 x 1.80	295.00
SFE 6/4-60	6	IN-VB 4-60	DN 80/DN 80	20.00	4.00	4.30	1.10	6 x 2.30	350.00
SFE 6/4-70	6	IN-VB 4-70	DN 80/DN 80	20.00	4.00	4.90	1.10	6 x 2.30	365.00
SFE 6/4-80	6	IN-VB 4-80	DN 80/DN 80	20.00	4.00	5.60	1.50	6 x 3.20	390.00
SFE 6/4-90	6	IN-VB 4-90	DN 80/DN 80	20.00	4.00	6.40	1.50	6 x 3.20	398.00
SFE 6/4-100	6	IN-VB 4-100	DN 80/DN 80	20.00	4.00	7.20	1.50	6 x 3.20	405.00

MULTICELL

Technical data

Multicell SFE 6-30 to 6-100 with 2 to 6 pumps

Type	Pumps		Inlet/ Outlet connection	Average flow rate (m^3/h)	Reserve pump (m^3/h)	Target pressure (bar)	Power output P_2 (kW)	Rated current (A) 3~ 400 V	Approx. weight (kg)
	No.	Type							
SFE 2/6-30	2	IN-VB 6-30	R 2/R 2	6.00	6.00	2.20	0.75	2 x 1.80	145.00
SFE 2/6-40	2	IN-VB 6-40	R 2/R 2	6.00	6.00	2.90	1.10	2 x 2.30	160.00
SFE 2/6-50	2	IN-VB 6-50	R 2/R 2	6.00	6.00	3.70	1.10	2 x 2.30	165.00
SFE 2/6-60	2	IN-VB 6-60	R 2/R 2	6.00	6.00	4.40	1.50	2 x 3.20	170.00
SFE 2/6-70	2	IN-VB 6-70	R 2/R 2	6.00	6.00	5.30	1.50	2 x 3.20	180.00
SFE 2/6-80	2	IN-VB 6-80	R 2/R 2	6.00	6.00	5.90	2.20	2 x 4.60	190.00
SFE 2/6-90	2	IN-VB 6-90	R 2/R 2	6.00	6.00	6.60	2.20	2 x 4.60	193.00
SFE 2/6-100	2	IN-VB 6-100	R 2/R 2	6.00	6.00	7.40	2.20	2 x 4.60	195.00
SFE 3/6-30	3	IN-VB 6-30	R 2/R 2	12.00	6.00	2.20	0.75	3 x 1.80	190.00
SFE 3/6-40	3	IN-VB 6-40	R 2/R 2	12.00	6.00	2.90	1.10	3 x 2.30	210.00
SFE 3/6-50	3	IN-VB 6-50	R 2/R 2	12.00	6.00	3.70	1.10	3 x 2.30	230.00
SFE 3/6-60	3	IN-VB 6-60	R 2/R 2	12.00	6.00	4.40	1.50	3 x 3.20	240.00
SFE 3/6-70	3	IN-VB 6-70	R 2/R 2	12.00	6.00	5.30	1.50	3 x 3.20	255.00
SFE 3/6-80	3	IN-VB 6-80	R 2/R 2	12.00	6.00	5.90	2.20	3 x 4.60	270.00
SFE 3/6-90	3	IN-VB 6-90	R 2/R 2	12.00	6.00	6.60	2.20	3 x 4.60	273.00
SFE 3/6-100	3	IN-VB 6-100	R 2/R 2	12.00	6.00	7.40	2.20	3 x 4.60	275.00
SFE 4/6-30	4	IN-VB 6-30	DN 65/DN 65	18.00	6.00	2.20	0.75	4 x 1.80	225.00
SFE 4/6-40	4	IN-VB 6-40	DN 65/DN 65	18.00	6.00	2.90	1.10	4 x 2.30	240.00
SFE 4/6-50	4	IN-VB 6-50	DN 65/DN 65	18.00	6.00	3.70	1.10	4 x 2.30	255.00
SFE 4/6-60	4	IN-VB 6-60	DN 65/DN 65	18.00	6.00	4.40	1.50	4 x 3.20	270.00
SFE 4/6-70	4	IN-VB 6-70	DN 65/DN 65	18.00	6.00	5.30	1.50	4 x 3.20	280.00
SFE 4/6-80	4	IN-VB 6-80	DN 65/DN 65	18.00	6.00	5.90	2.20	4 x 4.60	295.00
SFE 4/6-90	4	IN-VB 6-90	DN 65/DN 65	18.00	6.00	6.60	2.20	4 x 4.60	300.00
SFE 4/6-100	4	IN-VB 6-100	DN 65/DN 65	18.00	6.00	7.40	2.20	4 x 4.60	305.00
SFE 5/6-30	5	IN-VB 6-30	DN 80/DN 80	24.00	6.00	2.20	0.75	5 x 1.80	250.00
SFE 5/6-40	5	IN-VB 6-40	DN 80/DN 80	24.00	6.00	2.90	1.10	5 x 2.30	270.00
SFE 5/6-50	5	IN-VB 6-50	DN 80/DN 80	24.00	6.00	3.70	1.10	5 x 2.30	285.00
SFE 5/6-60	5	IN-VB 6-60	DN 80/DN 80	24.00	6.00	4.40	1.50	5 x 3.20	315.00
SFE 5/6-70	5	IN-VB 6-70	DN 80/DN 80	24.00	6.00	5.30	1.50	5 x 3.20	325.00
SFE 5/6-80	5	IN-VB 6-80	DN 80/DN 80	24.00	6.00	5.90	2.20	5 x 4.60	345.00
SFE 5/6-90	5	IN-VB 6-90	DN 80/DN 80	24.00	6.00	6.40	2.20	5 x 4.60	350.00
SFE 5/6-100	5	IN-VB 6-100	DN 80/DN 80	24.00	6.00	7.40	2.20	5 x 4.60	355.00
SFE 6/6-30	6	IN-VB 6-30	DN 80/DN 80	30.00	6.00	2.20	0.75	6 x 1.80	280.00
SFE 6/6-40	6	IN-VB 6-40	DN 80/DN 80	30.00	6.00	2.90	1.10	6 x 2.30	305.00
SFE 6/6-50	6	IN-VB 6-50	DN 80/DN 80	30.00	6.00	3.70	1.10	6 x 2.30	325.00
SFE 6/6-60	6	IN-VB 6-60	DN 80/DN 80	30.00	6.00	4.40	1.50	6 x 3.20	380.00
SFE 6/6-70	6	IN-VB 6-70	DN 80/DN 80	30.00	6.00	5.30	1.50	6 x 3.20	395.00
SFE 6/6-80	6	IN-VB 6-80	DN 80/DN 80	30.00	6.00	5.90	2.20	6 x 4.60	420.00
SFE 6/6-90	6	IN-VB 6-90	DN 80/DN 80	30.00	6.00	6.60	2.20	6 x 4.60	428.00
SFE 6/6-100	6	IN-VB 6-100	DN 80/DN 80	30.00	6.00	7.40	2.20	6 x 4.60	435.00

MULTICELL

Technical data

Multicell SFE 10-30 to 10-100 with 2 to 6 pumps

Type	Pumps		Inlet/ Outlet connection	Average flow rate (m^3/h)	Reserve pump (m^3/h)	Target pressure (bar)	Power outlet P_2 (kW)	Rated current (A) 3~ 400 V	Approx. Weight (kg)
	No.	Type							
SFE 2/10-30	2	IN-VB 10-30	R 2/R 2	8.00	8.00	2.70	1.10	2 x 2.30	145.00
SFE 2/10-40	2	IN-VB 10-40	R 2/R 2	8.00	8.00	3.70	1.50	2 x 3.20	160.00
SFE 2/10-50	2	IN-VB 10-50	R 2/R 2	8.00	8.00	4.60	2.20	2 x 4.60	165.00
SFE 2/10-60	2	IN-VB 10-60	R 2/R 2	8.00	8.00	5.50	2.20	2 x 4.60	170.00
SFE 2/10-70	2	IN-VB 10-70	R 2/R 2	8.00	8.00	6.60	3.00	2 x 5.80	180.00
SFE 2/10-80	2	IN-VB 10-80	R 2/R 2	8.00	8.00	7.60	3.00	2 x 5.80	190.00
SFE 2/10-90	2	IN-VB 10-90	R 2/R 2	8.00	8.00	8.50	4.00	2 x 7.40	204.00
SFE 2/10-100	2	IN-VB 10-100	R 2/R 2	8.00	8.00	9.50	4.00	2 x 7.40	206.00
SFE 3/10-30	3	IN-VB 10-30	R 2 ½/R 2 ½	16.00	8.00	2.70	1.10	3 x 2.30	190.00
SFE 3/10-40	3	IN-VB 10-40	R 2 ½/R 2 ½	16.00	8.00	3.70	1.50	3 x 3.20	210.00
SFE 3/10-50	3	IN-VB 10-50	R 2 ½/R 2 ½	16.00	8.00	4.60	2.20	3 x 4.60	230.00
SFE 3/10-60	3	IN-VB 10-60	R 2 ½/R 2 ½	16.00	8.00	5.50	2.20	3 x 4.60	240.00
SFE 3/10-70	3	IN-VB 10-70	R 2 ½/R 2 ½	16.00	8.00	6.60	3.00	3 x 5.80	255.00
SFE 3/10-80	3	IN-VB 10-80	R 2 ½/R 2 ½	16.00	8.00	7.60	3.00	3 x 5.80	270.00
SFE 3/10-90	3	IN-VB 10-90	R 2 ½/R 2 ½	16.00	8.00	8.50	4.00	3 x 7.40	291.00
SFE 3/10-100	3	IN-VB 10-100	R 2 ½/R 2 ½	16.00	8.00	9.90	4.00	3 x 7.40	294.00
SFE 4/10-30	4	IN-VB 10-30	DN 80/DN 80	24.00	8.00	2.70	1.10	4 x 2.30	235.00
SFE 4/10-40	4	IN-VB 10-40	DN 80/DN 80	24.00	8.00	3.70	1.50	4 x 3.20	260.00
SFE 4/10-50	4	IN-VB 10-50	DN 80/DN 80	24.00	8.00	4.60	2.20	4 x 4.60	275.00
SFE 4/10-60	4	IN-VB 10-60	DN 80/DN 80	24.00	8.00	5.50	2.20	4 x 4.60	285.00
SFE 4/10-70	4	IN-VB 10-70	DN 80/DN 80	24.00	8.00	6.60	3.00	4 x 5.80	305.00
SFE 4/10-80	4	IN-VB 10-80	DN 80/DN 80	24.00	8.00	7.60	3.00	4 x 5.80	325.00
SFE 4/10-90	4	IN-VB 10-90	DN 80/DN 80	24.00	8.00	8.50	4.00	4 x 7.40	353.00
SFE 4/10-100	4	IN-VB 10-100	DN 80/DN 80	24.00	8.00	9.50	4.00	4 x 7.40	357.00
SFE 5/10-30	5	IN-VB 10-30	DN 100/DN 100	32.00	8.00	2.70	1.10	5 x 2.30	280.00
SFE 5/10-40	5	IN-VB 10-40	DN 100/DN 100	32.00	8.00	3.70	1.50	5 x 3.20	310.00
SFE 5/10-50	5	IN-VB 10-50	DN 100/DN 100	32.00	8.00	4.60	2.20	5 x 4.60	330.00
SFE 5/10-60	5	IN-VB 10-60	DN 100/DN 100	32.00	8.00	5.50	2.20	5 x 4.60	340.00
SFE 5/10-70	5	IN-VB 10-70	DN 100/DN 100	32.00	8.00	6.60	3.00	5 x 5.80	365.00
SFE 5/10-80	5	IN-VB 10-80	DN 100/DN 100	32.00	8.00	7.60	3.00	5 x 5.80	390.00
SFE 5/10-90	5	IN-VB 10-90	DN 100/DN 100	32.00	8.00	8.50	4.00	5 x 7.40	425.00
SFE 5/10-100	5	IN-VB 10-100	DN 100/DN 100	32.00	8.00	9.50	4.00	5 x 7.40	430.00
SFE 6/10-30	6	IN-VB 10-30	DN 100/DN 100	40.00	8.00	2.70	1.10	6 x 2.30	325.00
SFE 6/10-40	6	IN-VB 10-40	DN 100/DN 100	40.00	8.00	3.70	1.50	6 x 3.20	360.00
SFE 6/10-50	6	IN-VB 10-50	DN 100/DN 100	40.00	8.00	4.60	2.20	6 x 4.60	385.00
SFE 6/10-60	6	IN-VB 10-60	DN 100/DN 100	40.00	8.00	5.50	2.20	6 x 4.60	400.00
SFE 6/10-70	6	IN-VB 10-70	DN 100/DN 100	40.00	8.00	6.60	3.00	6 x 5.80	430.00
SFE 6/10-80	6	IN-VB 10-80	DN 100/DN 100	40.00	8.00	7.60	3.00	6 x 5.80	460.00
SFE 6/10-90	6	IN-VB 10-90	DN 100/DN 100	40.00	8.00	8.50	4.00	6 x 7.40	502.00
SFE 6/10-100	6	IN-VB 10-100	DN 100/DN 100	40.00	8.00	9.50	4.00	6 x 7.40	508.00

MULTICELL

Technical data

Multicell SFE 15-20 to 15-100 with 2 to 6 pumps

Type	Pumps		Inlet/ Outlet connection	Average flow rate (m^3/h)	Reserve pump (m^3/h)	Target pressure (bar)	Power output P_2 (kW)	Rated current (A) 3~ 400 V	Approx. weight (kg)
	No.	Type							
SFE 2/15-20	2	IN-VB 15-20	DN 80/DN 80	15.00	15.00	2.30	2.20	2 x 4.60	195.00
SFE 2/15-30	2	IN-VB 15-30	DN 80/DN 80	15.00	15.00	3.50	3.00	2 x 5.80	210.00
SFE 2/15-40	2	IN-VB 15-40	DN 80/DN 80	15.00	15.00	4.70	4.00	2 x 7.40	225.00
SFE 2/15-50	2	IN-VB 15-50	DN 80/DN 80	15.00	15.00	6.00	5.50	2 x 10.00	305.00
SFE 2/15-60	2	IN-VB 15-60	DN 80/DN 80	15.00	15.00	7.30	5.50	2 x 10.00	310.00
SFE 2/15-70	2	IN-VB 15-70	DN 80/DN 80	15.00	15.00	8.50	7.50	2 x 13.30	315.00
SFE 2/15-80	2	IN-VB 15-80	DN 80/DN 80	15.00	15.00	9.70	7.50	2 x 13.30	320.00
SFE 2/15-90	2	IN-VB 15-90	DN 80/DN 80	15.00	15.00	10.90	11.00	2 x 19.30	470.00
SFE 2/15-100	2	IN-VB 15-100	DN 80/DN 80	15.00	15.00	12.20	11.00	2 x 19.30	475.00
SFE 3/15-20	3	IN-VB 15-20	DN 100/DN 100	30.00	15.00	2.30	2.20	3 x 4.60	270.00
SFE 3/15-30	3	IN-VB 15-30	DN 100/DN 100	30.00	15.00	3.50	3.00	3 x 5.80	300.00
SFE 3/15-40	3	IN-VB 15-40	DN 100/DN 100	30.00	15.00	4.70	4.00	3 x 7.40	315.00
SFE 3/15-50	3	IN-VB 15-50	DN 100/DN 100	30.00	15.00	6.00	5.50	3 x 10.00	430.00
SFE 3/15-60	3	IN-VB 15-60	DN 100/DN 100	30.00	15.00	7.30	5.50	3 x 10.00	435.00
SFE 3/15-70	3	IN-VB 15-70	DN 100/DN 100	30.00	15.00	8.50	7.50	3 x 13.30	450.00
SFE 3/15-80	3	IN-VB 15-80	DN 100/DN 100	30.00	15.00	9.70	7.50	3 x 13.30	460.00
SFE 3/15-90	3	IN-VB 15-90	DN 100/DN 100	30.00	15.00	10.90	11.00	3 x 19.30	685.00
SFE 3/15-100	3	IN-VB 15-100	DN 100/DN 100	30.00	15.00	12.20	11.00	3 x 19.30	690.00
SFE 4/15-20	4	IN-VB 15-20	DN 100/DN 100	45.00	15.00	2.30	2.20	4 x 4.60	350.00
SFE 4/15-30	4	IN-VB 15-30	DN 100/DN 100	45.00	15.00	3.50	3.00	4 x 5.80	385.00
SFE 4/15-40	4	IN-VB 15-40	DN 100/DN 100	45.00	15.00	4.70	4.00	4 x 7.40	410.00
SFE 4/15-50	4	IN-VB 15-50	DN 100/DN 100	45.00	15.00	6.00	5.50	4 x 10.00	565.00
SFE 4/15-60	4	IN-VB 15-60	DN 100/DN 100	45.00	15.00	7.30	5.50	4 x 10.00	570.00
SFE 4/15-70	4	IN-VB 15-70	DN 100/DN 100	45.00	15.00	8.50	7.50	4 x 13.30	590.00
SFE 4/15-80	4	IN-VB 15-80	DN 100/DN 100	45.00	15.00	9.70	7.50	4 x 13.30	595.00
SFE 4/15-90	4	IN-VB 15-90	DN 100/DN 100	45.00	15.00	10.90	11.00	4 x 19.30	905.00
SFE 4/15-100	4	IN-VB 15-100	DN 100/DN 100	45.00	15.00	12.20	11.00	4 x 19.30	910.00
SFE 5/15-20	5	IN-VB 15-20	DN 125/DN 125	60.00	15.00	2.30	2.20	5 x 4.60	425.00
SFE 5/15-30	5	IN-VB 15-30	DN 125/DN 125	60.00	15.00	3.50	3.00	5 x 5.80	470.00
SFE 5/15-40	5	IN-VB 15-40	DN 125/DN 125	60.00	15.00	4.70	4.00	5 x 7.40	505.00
SFE 5/15-50	5	IN-VB 15-50	DN 125/DN 125	60.00	15.00	6.00	5.50	5 x 10.00	695.00
SFE 5/15-60	5	IN-VB 15-60	DN 125/DN 125	60.00	15.00	7.30	5.50	5 x 10.00	700.00
SFE 5/15-70	5	IN-VB 15-70	DN 125/DN 125	60.00	15.00	8.50	7.50	5 x 13.30	725.00
SFE 5/15-80	5	IN-VB 15-80	DN 125/DN 125	60.00	15.00	9.70	7.50	5 x 13.30	735.00
SFE 5/15-90	5	IN-VB 15-90	DN 125/DN 125	60.00	15.00	10.90	11.00	5 x 19.30	1120.00
SFE 5/15-100	5	IN-VB 15-100	DN 125/DN 125	60.00	15.00	12.20	11.00	5 x 19.30	1125.00
SFE 6/15-20	6	IN-VB 15-20	DN 125/DN 125	75.00	15.00	2.30	2.20	6 x 4.60	505.00
SFE 6/15-30	6	IN-VB 15-30	DN 125/DN 125	75.00	15.00	3.50	3.00	6 x 5.80	555.00
SFE 6/15-40	6	IN-VB 15-40	DN 125/DN 125	75.00	15.00	4.70	4.00	6 x 7.40	590.00
SFE 6/15-50	6	IN-VB 15-50	DN 125/DN 125	75.00	15.00	6.00	5.50	6 x 10.00	825.00
SFE 6/15-60	6	IN-VB 15-60	DN 125/DN 125	75.00	15.00	7.30	5.50	6 x 10.00	830.00
SFE 6/15-70	6	IN-VB 15-70	DN 125/DN 125	75.00	15.00	8.50	7.50	6 x 13.30	860.00
SFE 6/15-80	6	IN-VB 15-80	DN 125/DN 125	75.00	15.00	9.70	7.50	6 x 13.30	865.00
SFE 6/15-90	6	IN-VB 15-90	DN 125/DN 125	75.00	15.00	10.90	11.00	6 x 19.30	1335.00
SFE 6/15-100	6	IN-VB 15-100	DN 125/DN 125	75.00	15.00	12.20	11.00	6 x 19.30	1340.00

MULTICELL

Order information

Multicell SFE 2-30 to 2-100 with 2 to 6 pumps and SFE 4-30 to 4-100 with 2 to 6 pumps

Type	Article no.	Net RRP	Gross RRP	Type	Article no.	Net RRP	Gross RRP
SFE 2/2-30	562.2031.000	**7,273.11 €**	8,655.00 €	**SFE 2/4-30**	562.4031.000	**7,281.51 €**	8,665.00 €
SFE 2/2-40	562.2041.000	**7,308.40 €**	8,697.00 €	**SFE 2/4-40**	562.4041.000	**7,357.14 €**	8,755.00 €
SFE 2/2-50	562.2051.000	**7,336.97 €**	8,731.00 €	**SFE 2/4-50**	562.4051.000	**7,373.95 €**	8,775.00 €
SFE 2/2-60	562.2061.000	**7,705.88 €**	8,932.00 €	**SFE 2/4-60**	562.4061.000	**7,515.97 €**	8,944.00 €
SFE 2/2-70	562.2071.000	**7,594.96 €**	9,039.00 €	**SFE 2/4-70**	562.4071.000	**7,873.95 €**	9,370.00 €
SFE 2/2-80	562.2081.000	**7,687.39 €**	9,148.00 €	**SFE 2/4-80**	562.4081.000	**8,146.22 €**	9,694.00 €
SFE 2/2-90	562.2091.000	**7,805.88 €**	9,289.00 €	**SFE 2/4-90**	562.0409.500	**8,166.39 €**	9,718.00 €
SFE 2/2-100	562.2101.000	**7,929.41 €**	9,436.00 €	**SFE 2/4-100**	562.4101.000	**8,233.61 €**	9,798.00 €
SFE 3/2-30	563.2031.000	**9,305.04 €**	11,073.00 €	**SFE 3/4-30**	563.4031.000	**9,320.17 €**	11,091.00 €
SFE 3/2-40	563.2041.000	**9,354.62 €**	11,132.00 €	**SFE 3/4-40**	563.4041.000	**9,429.41 €**	11,221.00 €
SFE 3/2-50	563.2051.000	**9,399.16 €**	11,185.00 €	**SFE 3/4-50**	563.4051.000	**9,457.98 €**	11,255.00 €
SFE 3/2-60	563.2061.000	**9,654.62 €**	11,489.00 €	**SFE 3/4-60**	563.4061.000	**9,669.75 €**	11,507.00 €
SFE 3/2-70	563.2071.000	**9,852.10 €**	11,724.00 €	**SFE 3/4-70**	563.4071.000	**10,206.72 €**	12,146.00 €
SFE 3/2-80	563.2081.000	**10,056.30 €**	11,967.00 €	**SFE 3/4-80**	563.4081.000	**10,536.13 €**	12,538.00 €
SFE 3/2-90	563.2091.000	**10,089.92 €**	12,007.00 €	**SFE 3/4-90**	563.0409.500	**10,595.80 €**	12,609.00 €
SFE 3/2-100	563.2101.000	**10,290.76 €**	12,246.00 €	**SFE 3/4-100**	563.4101.000	**10,663.03 €**	12,689.00 €
SFE 4/2-30	564.2031.000	**12,319.33 €**	14,660.00 €	**SFE 4/4-30**	564.4031.000	**12,338.66 €**	14,683.00 €
SFE 4/2-40	564.2041.000	**12,385.72 €**	14,739.00 €	**SFE 4/4-40**	564.4041.000	**12,493.28 €**	14,867.00 €
SFE 4/2-50	564.2051.000	**12,449.58 €**	14,815.00 €	**SFE 4/4-50**	564.4051.000	**12,531.93 €**	14,913.00 €
SFE 4/2-60	564.2061.000	**12,802.52 €**	15,235.00 €	**SFE 4/4-60**	564.4061.000	**12,821.85 €**	15,258.00 €
SFE 4/2-70	564.2071.000	**13,069.75 €**	15,553.00 €	**SFE 4/4-70**	564.4071.000	**13,571.43 €**	16,150.00 €
SFE 4/2-80	564.2081.000	**13,362.19 €**	15,901.00 €	**SFE 4/4-80**	564.4081.000	**14,061.34 €**	16,733.00 €
SFE 4/2-90	564.2091.000	**13,394.96 €**	15,940.00 €	**SFE 4/4-90**	564.0409.500	**14,141.18 €**	16,828.00 €
SFE 4/2-100	564.2101.000	**13,686.56 €**	16,287.00 €	**SFE 4/4-100**	564.4101.000	**14,205.04 €**	16,904.00 €
SFE 5/2-30	565.0203.500	**15,157.14 €**	18,037.00 €	**SFE 5/4-30**	565.0403.500	**15,174.79 €**	18,058.00 €
SFE 5/2-40	565.0204.500	**15,222.69 €**	18,115.00 €	**SFE 5/4-40**	565.0404.500	**15,330.25 €**	18,243.00 €
SFE 5/2-50	565.0205.500	**15,286.55 €**	18,191.00 €	**SFE 5/4-50**	565.0405.500	**15,367.23 €**	18,287.00 €
SFE 5/2-60	565.0206.500	**15,638.66 €**	18,610.00 €	**SFE 5/4-60**	565.0406.500	**15,657.98 €**	18,633.00 €
SF E 5/2-70	565.0207.500	**15,907.56 €**	18,930.00 €	**SFE 5/4-70**	565.0407.500	**16,408.40 €**	19,526.00 €
SFE 5/2-80	565.0208.500	**16,200.00 €**	19,278.00 €	**SFE 5/4-80**	565.0408.500	**16,931.93 €**	20,149.00 €
SFE 5/2-90	565.0209.500	**16,232.77 €**	19,317.00 €	**SFE 5/4-90**	565.0409.500	**16,972.27 €**	20,197.00 €
SFE 5/2-100	565.0210.500	**16,544.54 €**	19,688.00 €	**SFE 5/4-100**	565.0410.500	**17,042.86 €**	20,281.00 €
SFE 6/2-30	566.0203.500	**17,989.08 €**	21,407.00 €	**SFE 6/4-30**	566.0403.500	**18,005.88 €**	21,427.00 €
SFE 6/2-40	566.0204.500	**18,055.46 €**	21,486.00 €	**SFE 6/4-40**	566.0404.500	**18,161.34 €**	21,612.00 €
SFE 6/2-50	566.0205.500	**18,118.49 €**	21,561.00 €	**SFE 6/4-50**	566.0405.500	**18,199.16 €**	21,657.00 €
SFE 6/2-60	566.0206.500	**18,470.59 €**	21,980.00 €	**SFE 6/4-60**	566.0406.500	**18,489.92 €**	22,003.00 €
SFE 6/2-70	566.0207.500	**18,739.50 €**	22,300.00 €	**SFE 6/4-70**	566.0407.500	**19,241.18 €**	22,897.00 €
SFE 6/2-80	566.0208.500	**19,031.09 €**	22,647.00 €	**SFE 6/4-80**	566.0408.500	**19,729.41 €**	23,478.00 €
SFE 6/2-90	566.0209.500	**19,063.03 €**	22,685.00 €	**SFE 6/4-90**	566.0409.500	**19,805.04 €**	23,568.00 €
SFE 6/2-100	566.0210.500	**19,376.47 €**	23,058.00 €	**SFE 6/4-100**	566.0410.500	**20,226.05 €**	24,069.00 €
Commissioning	INBK					**484.03 €**	576.00 €

MULTICELL

Order information

Multicell SFE 6-30 to 4-100 with 2 to 6 pumps and SFE 10-30 to 10-100 with 2 to 6 pumps

Type	Article no.	Net RRP	Gross RRP	Type	Article no.	Net RRP	Gross RRP
SFE 2/6-30	562.0603.500	7,568.91 €	9,007.00 €	SFE 2/10-30	562.8031.000	8,252.94 €	9,821.00 €
SFE 2/6-40	562.0604.500	7,751.26 €	9,224.00 €	SFE 2/10-40	562.8041.000	9,012.61 €	10,725.00 €
SFE 2/6-50	562.0605.500	7,885.71 €	9,384.00 €	SFE 2/10-50	562.8051.000	9,518.49 €	11,327.00 €
SFE 2/6-60	562.0606.500	8,525.21 €	10,145.00 €	SFE 2/10-60	562.8061.000	9,999.16 €	11,899.00 €
SFE 2/6-70	562.0607.500	8,661.34 €	10,307.00 €	SFE 2/10-70	562.8071.000	10,689.08 €	12,720.00 €
SFE 2/6-80	562.0608.500	9,248.74 €	11,006.00 €	SFE 2/10-80	562.8081.000	10,877.31 €	12,944.00 €
SFE 2/6-90	562.0609.500	9,383.19 €	11,166.00 €	SFE 2/10-90	562.8091.000	11,164.71 €	13,286.00 €
SFE 2/6-100	562.0610.500	9,519.33 €	11,328.00 €	SFE 2/10-100	562.8101.000	11,518.49 €	13,707.00 €
SFE 3/6-30	563.0603.500	9,749.58 €	11,602.00 €	SFE 3/10-30	563.8031.000	10,614.29 €	12,631.00 €
SFE 3/6-40	563.0604.500	10,024.37 €	11,929.00 €	SFE 3/10-40	563.8041.000	11,789.08 €	14,029.00 €
SFE 3/6-50	563.0605.500	10,226.05 €	12,169.00 €	SFE 3/10-50	563.8051.000	12,393.28 €	14,748.00 €
SFE 3/6-60	563.0606.500	11,105.88 €	13,216.00 €	SFE 3/10-60	563.8061.000	12,546.22 €	14,930.00 €
SFE 3/6-70	563.0607.500	11,310.92 €	13,460.00 €	SFE 3/10-70	563.8071.000	13,012.61 €	15,485.00 €
SFE 3/6-80	563.0608.500	12,176.47 €	14,490.00 €	SFE 3/10-80	563.8081.000	13,216.81 €	15,728.00 €
SFE 3/6-90	563.0609.500	12,377.31 €	14,729.00 €	SFE 3/10-90	563.8091.000	15,343.70 €	18,259.00 €
SFE 3/6-100	563.0610.500	12,582.35 €	14,973.00 €	SFE 3/10-100	563.8101.000	15,573.11 €	18,532.00 €
SFE 4/6-30	564.0603.500	12,920.17 €	15,375.00 €	SFE 4/10-30	564.8031.000	14,894.96 €	17,725.00 €
SFE 4/6-40	564.0604.500	13,293.28 €	15,819.00 €	SFE 4/10-40	564.8041.000	16,526.05 €	19,666.00 €
SFE 4/6-50	564.0605.500	13,560.50 €	16,137.00 €	SFE 4/10-50	564.8051.000	17,354.62 €	20,652.00 €
SFE 4/6-60	564.0606.500	14.821,01 €	17,637.00 €	SFE 4/10-60	564.8061.000	17,571.43 €	20,910.00 €
SFE 4/6-70	564.0607.500	15.092,44 €	17,960.00 €	SFE 4/10-70	564.8071.000	18,216.81 €	21,678.00 €
SFE 4/6-80	564.0608.500	16.292,44 €	19,388.00 €	SFE 4/10-80	564.8081.000	18,501.68 €	22,017.00 €
SFE 4/6-90	564.0609.500	16.557,98 €	19,704.00 €	SFE 4/10-90	564.8091.000	20,457.98 €	24,345.00 €
SFE 4/6-100	564.0610.500	16.831,09 €	20,029.00 €	SFE 4/10-100	564.8101.000	20,763.87 €	24,709.00 €
SFE 5/6-30	565.0603.500	15.752,10 €	18,745.00 €	SFE 5/10-30	565.1003.500	17,732.77 €	21,102.00 €
SFE 5/6-40	565.0604.500	16.124,37 €	19,188.00 €	SFE 5/10-40	565.1004.500	19,363.87 €	23,043.00 €
SFE 5/6-50	565.0605.500	16.392,44 €	19,507.00 €	SFE 5/10-50	565.1005.500	20,190.76 €	24,027.00 €
SFE 5/6-60	565.0606.500	17.652,10 €	21,006.00 €	SFE 5/10-60	565.1006.500	20,403.36 €	24,280.00 €
SFE 5/6-70	565.0607.500	17.923,53 €	21,329.00 €	SFE 5/10-70	565.1007.500	21,056.30 €	25,057.00 €
SFE 5/6-80	565.0608.500	19.122,69 €	22,756.00 €	SFE 5/10-80	565.1008.500	21,340.34 €	25,395.00 €
SFE 5/6-90	565.0609.500	19.389,92 €	23,074.00 €	SFE 5/10-90	565.1009.500	25,572.27 €	30,431.00 €
SFE 5/6-100	565.0610.500	19.663,03 €	23,399.00 €	SFE 5/10-100	565.1010.500	25,953.78 €	30,885.00 €
SFE 6/6-30	566.0603.500	18.583,19 €	22,114.00 €	SFE 6/10-30	566.1003.500	20,565.55 €	24,473.00 €
SFE 6/6-40	566.0604.500	18.957,14 €	22,559.00 €	SFE 6/10-40	566.1004.500	22,196.64 €	26,414.00 €
SFE 6/6-50	566.0605.500	19.225,21 €	22,878.00 €	SFE 6/10-50	566.1005.500	23,027.73 €	27,403.00 €
SFE 6/6-60	566.0606.500	20.483,19 €	24,375.00 €	SFE 6/10-60	566.1006.500	23,235.29 €	27,650.00 €
SFE 6/6-70	566.0607.500	20.755,46 €	24,699.00 €	SFE 6/10-70	566.1007.500	23,889.08 €	28,428.00 €
SFE 6/6-80	566.0608.500	21,954.62 €	26,126.00 €	SFE 6/10-80	566.1008.500	24,173.11 €	28,766.00 €
SFE 6/6-90	566.0609.500	22,223.53 €	26,446.00 €	SFE 6/10-90	566.1009.500	30,687.39 €	36,518.00 €
SFE 6/6-100	566.0610.500	22,494.12 €	26,768.00 €	SFE 6/10-100	566.1010.500	31,145.38 €	37,063.00 €
Commissioning	INBK					484.03 €	576.00 €

MULTICELL

Order information

Multicell SFE 15-20 to 15-100 with 2 to 6 pumps

Type	Article no.	Net RRP	Gross RRP
SFE 2/15-20	562.9021.000	**10,605.04 €**	12,620.00 €
SFE 2/15-30	562.9031.000	**11,162.18 €**	13,283.00 €
SFE 2/15-40	562.9041.000	**13,338.66 €**	15,873.00 €
SFE 2/15-50	562.9051.000	**16,521.01 €**	19,660.00 €
SFE 2/15-60	562.9061.000	**16,718.49 €**	19,895.00 €
SFE 2/15-70	562.9071.000	**17,853.78 €**	21,246.00 €
SFE 2/15-80	562.9081.000	**18,027.73 €**	21,453.00 €
SFE 2/15-90	562.1509.500	**20,710.08 €**	24,645.00 €
SFE 2/15-100	562.9101.000	**20,894.96 €**	24,865.00 €
SFE 3/15-20	563.1502.500	**14,782.35 €**	17,591.00 €
SFE 3/15-30	563.1503.500	**15,618.49 €**	18,586.00 €
SFE 3/15-40	563.1504.500	**18,879.83 €**	22,467.00 €
SFE 3/15-50	563.1505.500	**23,657.98 €**	28,153.00 €
SFE 3/15-60	563.1506.500	**23,956.30 €**	28,508.00 €
SFE 3/15-70	563.1507.500	**25,660.50 €**	30,536.00 €
SFE 3/15-80	563.1508.500	**25,921.85 €**	30,847.00 €
SFE 3/15-90	563.1509.500	**29,932.77 €**	35,620.00 €
SFE 3/15-100	563.1510.500	**30,221.85 €**	35,964.00 €
SFE 4/15-20	564.1502.500	**18,953.78 €**	22,555.00 €
SFE 4/15-30	564.1503.500	**20,068.07 €**	23,881.00 €
SFE 4/15-40	564.1504.500	**24,419.33 €**	29,059.00 €
SFE 4/15-50	564.1505.500	**30,789.08 €**	36,639.00 €
SFE 4/15-60	564.1506.500	**31,186.55 €**	37,112.00 €
SFE 4/15-70	564.1507.500	**33,458.82 €**	39,816.00 €
SFE 4/15-80	564.1508.500	**33,807.56 €**	40,231.00 €
SFE 4/15-90	564.1509.500	**38,912.61 €**	46,306.00 €
SFE 4/15-100	564.1510.500	**39,288.24 €**	46,753.00 €
SFE 5/15-20	565.1502.500	**23,124.37 €**	27,518.00 €
SFE 5/15-30	565.1503.500	**24,521.01 €**	29,180.00 €
SFE 5/15-40	565.1504.500	**29,857.98 €**	35,650.00 €
SFE 5/15-50	565.1505.500	**37,919.33 €**	45,124.00 €
SFE 5/15-60	565.1506.500	**38,415.13 €**	45,714.00 €
SFE 5/15-70	565.1507.500	**41,255.46 €**	49,094.00 €
SFE 5/15-80	565.1508.500	**41,692.44 €**	49,614.00 €
SFE 5/15-90	565.1509.500	**48,376.47 €**	57,568.00 €
SFE 5/15-100	565.1510.500	**48,858.82 €**	58,142.00 €
SFE 6/15-20	566.1502.500	**27,295.80 €**	32,482.00 €
SFE 6/15-30	566.1503.500	**28,973.11 €**	34,478.00 €
SFE 6/15-40	566.1504.500	**35,497.48 €**	42,242.00 €
SFE 6/15-50	566.1505.500	**45,048.74 €**	53,608.00 €
SFE 6/15-60	566.1506.500	**45,646.22 €**	54,319.00 €
SFE 6/15-70	566.1507.500	**49,054.62 €**	58,375.00 €
SFE 6/15-80	566.1508.500	**49,577.31 €**	58,997.00 €
SFE 6/15-90	566.1509.500	**57,600.00 €**	68,544.00 €
SFE 6/15-100	566.1510.500	**58,176.47 €**	69,230.00 €
Commissioning	INBK	**484.03 €**	576.00 €

MULTICELL

Dimensions

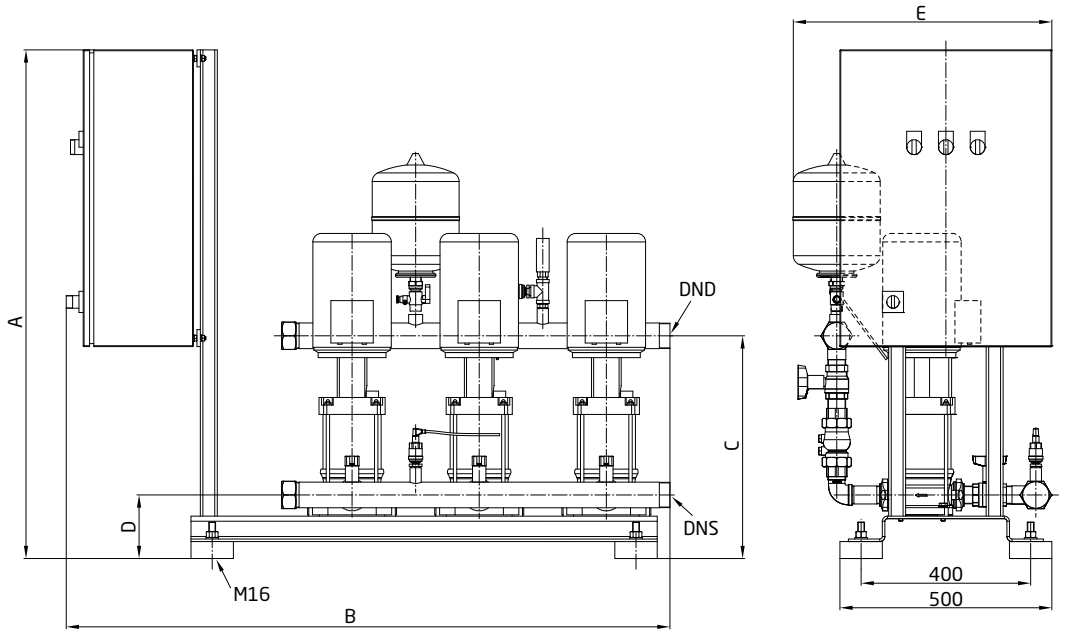

Multicell SFE 2-30 to 2-100

Number of pumps	A	B	C	D	E
2	1200	1020	500	150	610
3	1200	1320	500	150	610
4	1200	1620	500	150	610
5	1200	1920	500	150	610
6	1200	2220	500	150	610

Multicell SFE 4-30 to 4-100 / Multicell SFE 6-30 to 6-100

Number of pumps	A	B	C	D	E
2	1200	1020	530	150	610
3	1200	1320	530	150	610
4	1200	1620	530	150	610
5	1200	1920	530	150	610
6	1200	2220	530	150	610

Multicell SFE 10-30 to 10-100

Number of pumps	A	B	C	D	E
2	1200	1020	600	180	610
3	1200	1320	600	180	610
4	1200	1620	600	180	610
5	1200	1920	600	180	610
6	1200	2220	600	180	610

Multicell SFE 15-30 to 15-100

Number of pumps	A	B	C	D	E
2	1500	1070	700	190	1000
3	1500	1490	700	190	1000
4	1500	2050	700	190	1000
5	1500	2330	700	190	1000
6	1500	2750	700	190	1000

Connections seen on the supply line:
Inlet right, pressure side right, switch box left as standard. Modifications possible on request.

ACCESSORIES

Aquacell/Multicell

Dry run protection

Type	Article no.	Weight (kg)	Net RRP	Gross RRP
Float switch with 10 m cable (red)	500.8400.003	5.00	**37.82 €**	45.00 €
Pressure switch in feed line with pre-pressure over 1 bar	561.9901.000	0.50	**198.32 €**	236.00 €
Pressure switch in pressure line with pre-pressure below 1 bar	561.9902.000	0.50	**184.87 €**	220.00 €

Diaphragm pressure vessel with diaphragm resistand to food stuffs, inner coating and filling valve.

Type	Article no.	Volume (l)	PN (bar)	ØD (mm)	H (mm)	Connection (R)	Weight (kg)	Net RRP	Gross RRP
Refix DD 8	505.4100.008	8	16	206	335	¾	1.70	**74.54 €**	88.70 €
Refix DD 18	505.4100.018	18	10	280	395	¾	2.50	**93.28 €**	111.00 €
Flow fitting	505.4100.009					¾	0.30	**37.82 €**	45.00 €

Diaphragm pressure vessel, PN 10, for drinking water
with replaceable diaphragm resistant to food stuffs, preloaded with 4 bar, pressure gauge, filling valve and manufacturer's certificate.
Container has additional inner coating. All containers are equipped with dual connections.

Type	Article no.	Volume (l)	Max. volume flow (m^3/h)	ØD (mm)	H (mm)	Connection (DN)	Weight (kg)	Net RRP	Gross RRP
Refix DT 80	505.4100.080	80	15	480	750	**50**	23.70	**813.45 €**	968.00 €
Refix DT 100	505.4100.100	100	15	480	834	**50**	26.80	**862.18 €**	1,026.00 €
Refix DT 200	505.4100.200	200	15	634	973	**50**	53.00	**1,388.24 €**	1,652.00 €
Refix DT 300	505.4100.300	300	15	634	1273	**50**	59.00	**1,531.09 €**	1,822.00 €
Refix DT 400	505.4100.400	400	15	740	1245	**50**	80.00	**1,748.74 €**	2,081.00 €
Refix DT 500	505.4100.500	500	15	740	1475	**50**	88.00	**1,847.06 €**	2,198.00 €

Type	Article no.	Volume (l)	Max. volume flow (m^3/h)	ØD (mm)	H (mm)	Connection (DN)	Weight (kg)	Net RRP	Gross RRP
Refix DT 80	505.4100.082	80	27	480	750	**65**	24.70	**825.21 €**	982.00 €
Refix DT 100	505.4100.102	100	27	480	834	**65**	27.80	**876.47 €**	1,043.00 €
Refix DT 200	505.4100.202	200	27	634	973	**65**	54.00	**1,394.96 €**	1,660.00 €
Refix DT 300	505.4100.302	300	27	634	1273	**65**	60.00	**1,539.50 €**	1,832.00 €
Refix DT 400	505.4100.402	400	27	740	1245	**65**	81.00	**1,755.46 €**	2,089.00 €
Refix DT 500	505.4100.501	500	27	740	1475	**65**	89.00	**1,854.62 €**	2,207.00 €

Diaphragm pressure vessel, PN 10, for process and fire extinguishing water
with replaceable diaphragm, preloaded with 4 bar, pressure gauge, filling valve and manufacturer's certificate.
Container has additional inner coating. No medium flow, no shut-off, no drainage.

Type	Article no.	Volume (l)	ØD (mm)	H (mm)	Connection (G)	Weight (kg)	Net RRP	Gross RRP
Refix DE 80	505.4300.080	80	480	737	**1**	14,00	**374.79 €**	446.00 €
Refix DE 100	505.4300.100	100	480	852	**1**	16,00	**413.45 €**	492.00 €
Refix DE 200	505.4300.200	200	634	967	**1 ¼**	36,50	**856.30 €**	1,019.00 €
Refix DE 300	505.4300.300	300	634	1267	**1 ¼**	41,60	**996.64 €**	1,186.00 €
Refix DE 400	505.4300.400	400	740	1245	**1 ¼**	74,00	**1,249.58 €**	1,487.00 €
Refix DE 500	505.4300.500	500	740	1475	**1 ¼**	106,00	**1,785.71 €**	2,125.00 €

ACCESSORIES

Aquacell/Multicell

Rubber buffer PN 16 in food quality for drinking water, including length limiters.

Size (DN)	Article no.	Weight (kg)	Net RRP	Gross RRP
40	503.5200.040	4.10	**412.61 €**	491.00 €
50	503.5200.050	4.80	**412.61 €**	491.00 €
65	503.5200.065	5.30	**458.82 €**	546.00 €
80	503.5200.080	7.00	**481.51 €**	573.00 €
100	503.5200.100	7.40	**583.19 €**	694.00 €

Pressure reducer
with balanced single-seated valve, built-in dirt trap and transparent strainer cup (design A) or brass strainer cup (design B), housing and screws made from brass.

static pressure max. 25 bar
back pressure 1,5 - 6 bar = design A
back pressure 1,5 - 12 bar = design B

Size (R)	Article no.	Design	Max. Q (m³/h)	Weight (kg)	Net RRP	Gross RRP
1	504.4100.025	A	4.00	1.30	**154.62 €**	184.00 €
1	504.4200.025	B	4.00	1.30	**232.77 €**	277.00 €
1 ¼	504.4100.032	A	6.00	1.60	**228.57 €**	272.00 €
1 ¼	504.4200.032	B	6.00	1.60	**328.57 €**	391.00 €
1 ½	504.4100.038	A	9.00	3.20	**400.00 €**	476.00 €
1 ½	504.4200.038	B	9.00	3.20	**614.29 €**	731.00 €
2	504.4100.050	A	12.00	4.40	**487.39 €**	580.00 €
2	504.4200.050	B	12.00	4.40	**657.14 €**	782.00 €
Pressure gauge	507.6121.010	R ¼, connection at rear, 0 - 10 bar, Ø 63 mm			**6.47 €**	7.70 €

Foot valve made from brass, **PN 10**, seal in form of an o-ring, strainer made from plastic, temperature max. 60 °C.
Any installation position. Required for each pump when the unit is operated in intake mode.

Size (Rp)	Article no.	Weight (kg)	Net RRP	Gross RRP
1 ¼	507.2210.032	0.40	**108.40 €**	129.00 €
1 ½	507.2210.038	0.50	**133.61 €**	159.00 €
2	507.2210.050	0.70	**217.65 €**	259.00 €

Feed tank, closed, pressureless and made from polyethylene.

Size (l)	Article no.	Weight (kg)	Net RRP	Gross RRP
570	569.9230.000	25.00	**1,480.67 €**	1,762.00 €
1100	569.9200.000	90.00	**2,404.20 €**	2,861.00 €
2000	569.9210.000	150.00	**2,979.83 €**	3,546.00 €

Other sizes on request.

Feed tank, closed, pressureless an made from polyethylene (blue)
Total volume approx. 570 l, effective volume approx 495 l with detachable lid. Consisting of:
1 floating feed valve ¾"
1 dry run protection (float switch)
1 overflow DN 70
1 emergency feed tank overflow slit type AB
1 aeration and ventilation cap
1 ball valve for presssure boosting unit: Rp 1 ½
Minimum static pressure for the floating valve: 1.5 bar (4 m³/h)
Maximum static pressure for the floating valve: 5 bar
LxBxH: 696x696x1426 mm

Feed tank, closed, pressureless and made from polyethylene (black)
Total volume approx. 1100 l, effective volume approx. 800 l with dome, lid and strap. Consisting of:
1 ball bearing Rp 2 for feed line
1 floating feed valve R 2 with inlet pipe
1 dry run protection (float switch) with installation pipe
1 overflow DN 110
1 aeration and ventilation cap
1 drain cock
Minimum static pressure for the floating valve 1.2 bar (18 m³/h)
Maximum static pressure for the floating valve: 6 bar
Connection for the pressure boosting unit: Rp 2
LxBxH: 1400x720x1380 mm

Feed tank as described above, however with a total volume of approx. 2000 l, effective volume of approx. 1500 l.
LxBxH: 2070x720x1720 mm

Drinking water supply/grid disconnection/ extinguishing water supply systems

Product overview

Feuercell II FC
Performance: up to 54 m³/h
Page 32

Multicell II S2
Performance: up to 54 m³/h
Page 32

Extinguishing water supply accessories
Page 39

FEUERCELL II/MULTICELL II

Fire extinguishing systems

Field of application
– Extinguishing water supply
– Supply isolation
– Irrigation
– Water supply

Design
Fully automatic pressure boosting units according to DIN 14462. All units are wired ready for connection and with the pipes in place (on a base frame with rubber buffers). All units have a fully automatic pump control as well as a pressureless feed tank. The Multicell II fire extinguishing unit is designed redundantly.

Motor
Protection class ..... IP 55
Class of insulation ..... F
Voltage ..... 3~ 400/230 V ± 10 %
3~ 690/400 V ± 10 %
Motor speed ..... 2850 rpm
Frequency ..... 50 Hz

Technical data
Flow rate ..... Q up to max. 55 m³/h
Total dynamic head ..... H up to max. 150 m
Fluid temperature ..... t up to max. 20 °C
Operating pressure ..... p up to max. 16 bar

Pumped fluid
Clear fluids which don't chemically and mechanically attack the unit materials.

Materials used
Pump housing ..... stainless steel AISI 304
Impellers ..... stainless steel AISI 304
Diffusers ..... stainless steel AISI 304
Pump shaft ..... stainless steel AISI 303
Mechanical seal ..... carbon/SiC/EPDM
Pipework ..... stainless steel AISI 316Ti
Fixtures ..... copper alloy or cast iron
Base frame ..... stainless steel AISI 304
Feed tank ..... PE

Type key
Multicell II S2/40-30
Multicell II/Feuercell II ..... unit type
2 ..... number of pumps
40 ..... pump size
30 ..... number of stages x 10

Special editions
– Fire extinguishing systems for greater flow rates and higher operating pressures.
– Fire extinguishing systems without feed tank.

FEUERCELL II/MULTICELL II

Functional description

The units are turned on automatically via a pressure transmitter situated on the discharge side. They are turned off via a flow sensor on the discharge side.
An 8 l diaphragm pressure vessel is installed as a control in the pressure line.
All units are delivered with an electric shut-off relay (follow up) in order to reach a minimum pump running time.
The back feed and dry running protection are controlled by a submersible pressure sensor in the feed tank. The back feed is implemented using an electric ball valve. This electric ball valve is equipped with a battery, which closes the ball valve in a power cut.
A magnetic valve in the pressure side guarantees a minimum intake quantity to avoid overheating. All relevant contact transmitters are monitored for wire breakage and short circuits.
A weekly test run is included in the control. A temperature sensor protects the centrifugal pump against overheating.

Project planning notes

The flow rate and pressure required can be taken from the fire protection concept. If the specifications cannot be found here, use the table below to agree upon the data with the responsible fire safety authorities or the fire service.
The installation room should be lockable, well ventilated, otherwise unused and free of frost. The installation room must be separate from other fire compartments.
Installation rooms for extinguishing water transition points must be constructed in a way that makes flooding impossible. Sufficient drainage must be provided.
All shut-off devices in the extinguishing water pipe should be arranged as centrally as possible. They must be labelled and secured against unauthorised closing.
The electrical feed is to be used exclusively for the supply of the pressure boosting unit. Two feeds are necessary for redundant pressure boosting units. The electrical feed must be installed with functional preservation. The requirements of the model wiring guidelines for each German federal state apply.
If there is an indirect connection, a foreign water supply must be provided according to DIN 144641-2 to secure the readiness of the extinguishing water for the fire service.
Pressure reducers are permitted, however these should be avoided where possible.

Requied flow rates and pressures at the extraction valve (hydrant)

Category	Flow volume at min. flow pressure	Simultaneity	Min. flow pressure	Max. flow pressure	Max. resting pressure
Wall hydrant type S (Self service)	24 l/min	2	0.20 MPa (2.0 bar)	0.8 MPa (8.0 bar)	1.2 MPa (12.0 bar)
Wall hydrant type F (Fire service)	100 l/min	3	0.30 MPa (3.0 bar)	0.8 MPa (8.0 bar)	1.2 MPa (12.0 bar)
Wall hydrant type F (Fire service)	200 l/min	3	0.45 MPa (4.5 bar)	0.8 MPa (8.0 bar)	1.2 MPa (12.0 bar)
Surface hydrant DN 80	800 l/min	according to fire protection concept	0.15 MPa (1.5 bar)	0.8 MPa (8.0 bar)	1.2 MPa (12.0 bar)
Surface hydrant DN 100	1,600 l/min	according to fire protection concept	0.15 MPa (1.5 bar)	0.8 MPa (8.0 bar)	1.2 MPa (12.0 bar)
Underground hydrant DN 80	800 l/min	according to fire protection concept	0.15 MPa (1.5 bar)	0.8 MPa (8.0 bar)	1.2 MPa (12.0 bar)

FEUERCELL II/MULTICELL II

Characteristics

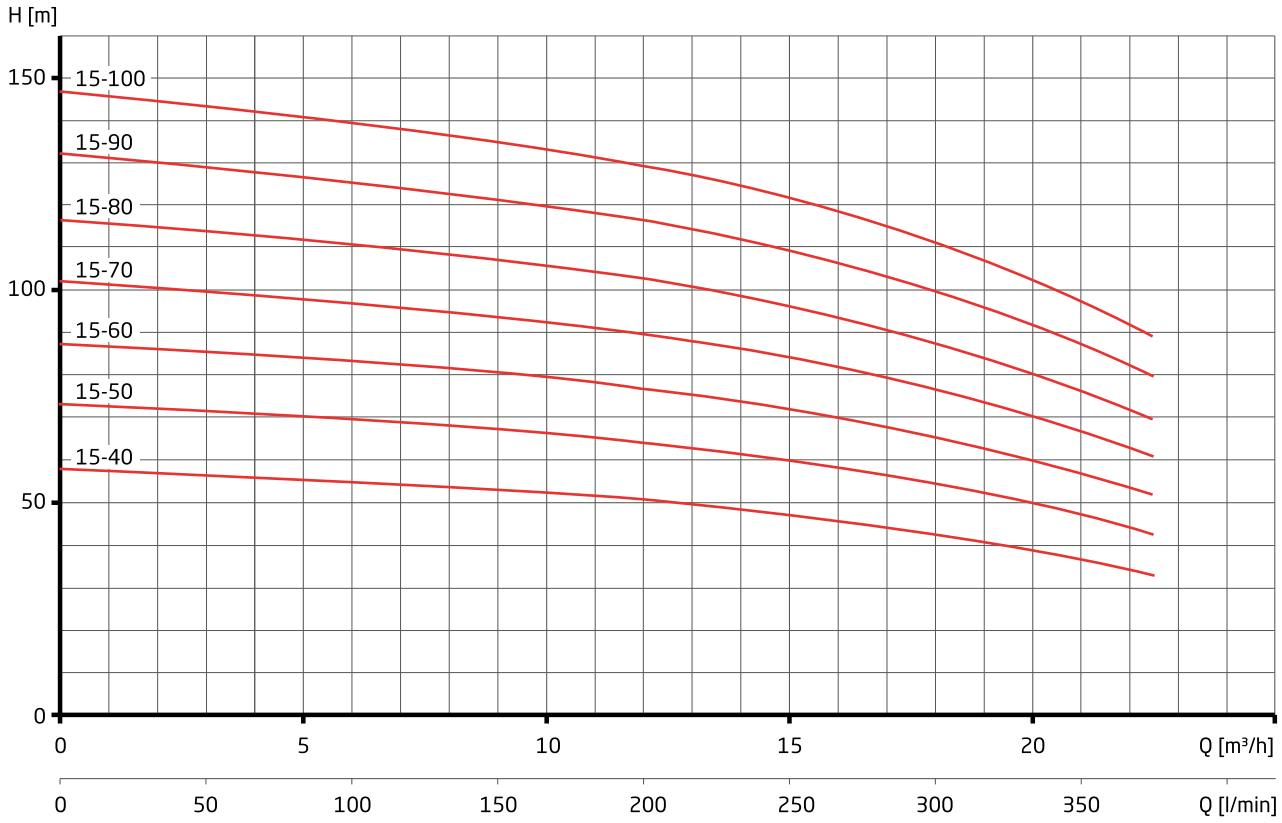

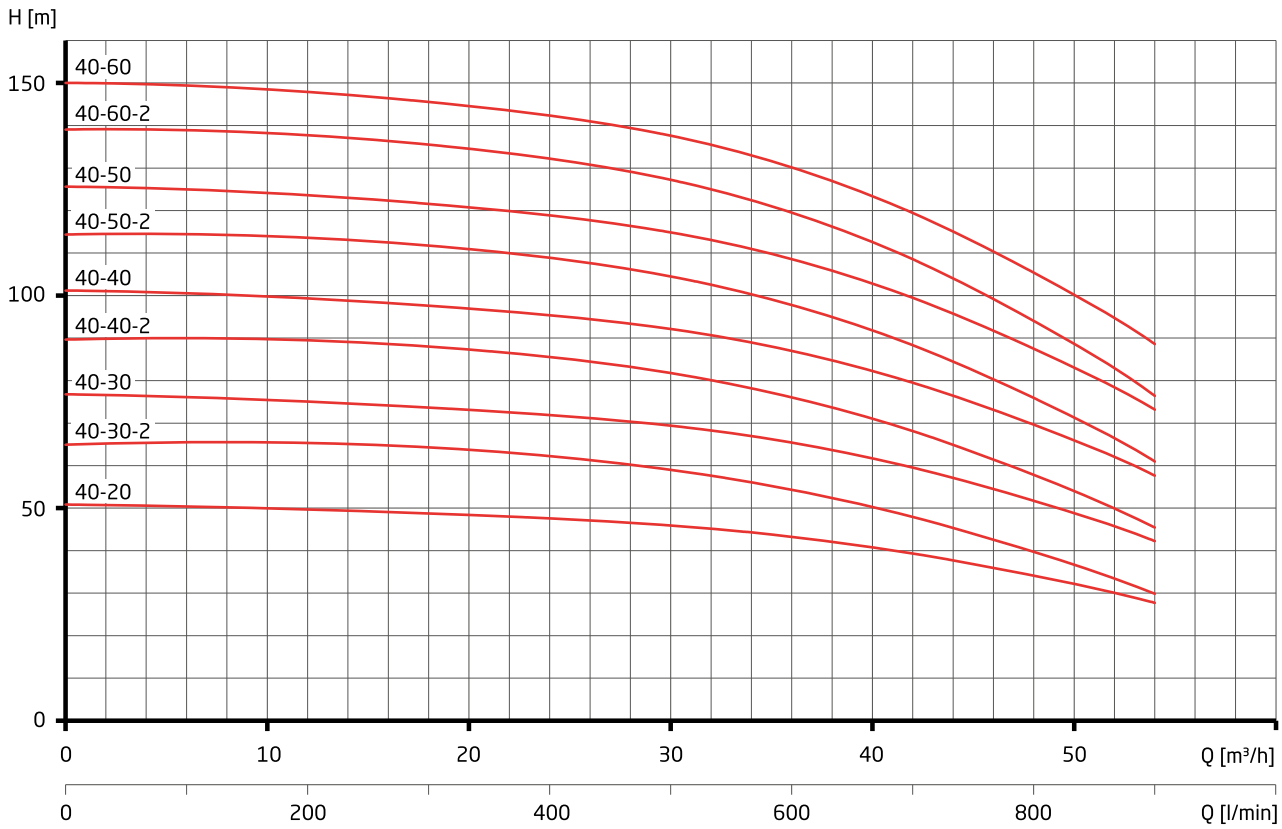

FEUERCELL II/MULTICELL II

Technical data

Feuercell II FC 15-40 to FC 40-60

Type	Flow rate Q (m³/H)	Dynamic head at Q H (bar)	Dynamic head at Q = 0 m³/h H_0 (bar)	Number of pumps	Pipe connections DNS/DND	Power output P_2 (kW) 3~ 400 V	Rated current (A) 3~ 400 V	Approx. Weight (kg)
FC 15-40	18	4.30	5.70	1	Rp 2/Rp 2	4.00	7.40	158.00
FC 15-50	18	5.40	7.30	1	Rp 2/Rp 2	5.50	10.00	197.00
FC 15-60	18	6.60	8.70	1	Rp 2/Rp 2	5.50	10.00	198.00
FC 15-70	18	7.70	10.20	1	Rp 2/Rp 2	7.50	13.30	203.00
FC 15-80	18	8.70	11.60	1	Rp 2/Rp 2	7.50	13.30	205.00
FC 15-90	18	10.00	13.20	1	Rp 2/Rp 2	11.00	19.30	285.00
FC 15-100	18	11.20	14.70	1	Rp 2/Rp 2	11.00	19.30	287.00
FC 40-20	36	4.20	5.00	1	Rp 2/DN 80	7.50	13.30	341.00
FC 40-30-2	36	5.30	6.50	1	Rp 2/DN 80	11.00	19.30	401.00
FC 40-30	36	6.60	7.80	1	Rp 2/DN 80	11.00	19.30	403.00
FC 40-40-2	36	7.70	9.00	1	Rp 2/DN 80	15.00	26.20	405.00
FC 40-40	36	8.70	10.10	1	Rp 2/DN 80	15.00	26.20	415.00
FC 40-50-2	36	9.70	11.50	1	Rp 2/DN 80	18.50	32.10	418.00
FC 40-50	36	10.80	12.50	1	Rp 2/DN 80	18.50	32.10	438.00
FC 40-60-2	36	12.00	14.00	1	Rp 2/DN 80	18.50	32.10	441.00
FC 40-60	36	13.00	15.00	1	Rp 2/DN 80	22.00	38.10	458.00

Multicell II S 2/15-40 to S 2/40-60

Type	Flow rate Q (m³/H)	Dynamic head at Q H (bar)	Dynamic head at Q = 0 m³/h H_0 (bar)	Number of pumps	Pipe connections DNS/DND	Power output P_2 (kW) per pump 3~ 400 V	Rated current (A) per pump 3~ 400 V	Approx. weight (kg)
S 2/15-40	18	4.30	5.70	2	2 x Rp 2/2x Rp 2	4.00	7.40	410.00
S 2/15-50	18	5.40	7.30	2	2 x Rp 2/2x Rp 2	5.50	10.00	490.00
S 2/15-60	18	6.60	8.70	2	2 x Rp 2/2x Rp 2	5.50	10.00	495.00
S 2/15-70	18	7.70	10.20	2	2 x Rp 2/2x Rp 2	7.50	13.30	505.00
S 2/15-80	18	8.70	11.60	2	2 x Rp 2/2x Rp 2	7.50	13.30	510.00
S 2/15-90	18	10.00	13.20	2	2 x Rp 2/2x Rp 2	11.00	19.30	670.00
S 2/15-100	18	11.20	14.70	2	2 x Rp 2/2x Rp 2	11.00	19.30	675.00
S 2/40-20	36	4.20	5.00	2	2 x Rp 2/2x DN 80	7.50	13.30	500.00
S 2/40-30-2	36	5.30	6.50	2	2 x Rp 2/2x DN 80	11.00	19.30	640.00
S 2/40-30	36	6.60	7.80	2	2 x Rp 2/2x DN 80	11.00	19.30	645.00
S 2/40-40-2	36	7.70	9.00	2	2 x Rp 2/2x DN 80	15.00	26.20	650.00
S 2/40-40	36	8.70	10.10	2	2 x Rp 2/2x DN 80	15.00	26.20	680.00
S 2/40-50-2	36	9.70	11.50	2	2 x Rp 2/2x DN 80	18.50	32.10	690.00
S 2/40-50	36	10.80	12.50	2	2 x Rp 2/2x DN 80	18.50	32.10	730.00
S 2/40-60-2	36	12.00	14.00	2	2 x Rp 2/2x DN 80	18.50	32.10	740.00
S 2/40-60	36	13.00	15.00	2	2 x Rp 2/2x DN 80	22.00	38.10	780.00

FEUERCELL II/MULTICELL II

Order information

Feuercell II FC 15-40 to FC 40-60

Type	Article no.	Net RRP	Gross RRP	Type	Article no.	Net RRP	Gross RRP
FC 15-40	567.1504.200	**15,505.04 €**	18,451.00 €	FC 40-20	567.4002.020	**24,689.08 €**	29,380.00 €
FC 15-50	567.1505.200	**16,133.61 €**	19,199.00 €	FC 40-30-2	567.4003.220	**25,623.53 €**	30,492.00 €
FC 15-60	567.1506.200	**16,227.73 €**	19,311.00 €	FC 40-30	567.4003.020	**25,660.50 €**	30,536.00 €
FC 15-70	567.1507.200	**16,692.44 €**	19,864.00 €	FC 40-40-2	567.4004.220	**26,476.47 €**	31,507.00 €
FC 15-80	567.1508.200	**16,826.05 €**	20,023.00 €	FC 40-40	567.4004.020	**26,882.35 €**	31,990.00 €
FC 15-90	567.1509.200	**17,921.85 €**	21,327.00 €	FC 40-50-2	567.4005.220	**27,870.59 €**	33,166.00 €
FC 15-100	567.1510.200	**18,045.38 €**	21,474.00 €	FC 40-50	567.4005.020	**29,992.44 €**	35,691.00 €
				FC 40-60-2	567.4006.220	**30,116.81 €**	35,839.00 €
				FC 40-60	567.4006.020	**30,264.71 €**	36,015.00 €
Commissioning	INBK					**484.03 €**	576.00 €

Multicell II S 2/15-40 to S 2/40-60

Type	Article no.	Net RRP	Gross RRP	Type	Article no.	Net RRP	Gross RRP
S 2/15-40	562.1504.200	**34,161.34 €**	40,652.00 €	S 2/40-20	562.4002.020	**36,893.28 €**	43,903.00 €
S 2/15-50	562.1505.200	**35,505.88 €**	42,252.00 €	S 2/40-30-2	562.4003.220	**38,680.67 €**	46,030.00 €
S 2/15-60	562.1506.200	**35,707.56 €**	42,492.00 €	S 2/40-30	562.4003.020	**38,752.10 €**	46,115.00 €
S 2/15-70	562.1507.200	**36,710.08 €**	43,685.00 €	S 2/40-40-2	562.4004.220	**40,273.95 €**	47,926.00 €
S 2/15-80	562.1508.200	**36,984.87 €**	44,012.00 €	S 2/40-40	562.4004.020	**41,101.68 €**	48,911.00 €
S 2/15-90	562.1509.200	**39,177.31 €**	46,621.00 €	S 2/40-50-2	562.4005.220	**42,998.32 €**	51,168.00 €
S 2/15-100	562.1510.200	**39,421.85 €**	46,912.00 €	S 2/40-50	562.4005.020	**47,068.91 €**	56,012.00 €
				S 2/40-60-2	562.4006.220	**47,319.33 €**	56,310.00 €
				S 2/40-60	562.4006.020	**47,611.76 €**	56,658.00 €
Commissioning	INBK					**484.03 €**	576.00 €

Accessories/supplements

Type	Article no.	Net RRP	Gross RRP
Rubber expansion joint DN 50	503.5200.050	**412.61 €**	491.00 €
Rubber expansion joint DN 80	503.5200.080	**481.51 €**	573.00 €
Automatic transfer switch 7.50 kW	569.9500.007	**3,069.75 €**	3,653.00 €
Automatic transfer switch 11.00 kW	569.9500.015	**3,335.29 €**	3,969.00 €
Automatic transfer switch 15.00 kW	569.9500.015	**3,335.29 €**	3,969.00 €
Automatic transfer switch 18.50 kW	569.9500.018	**3,583.19 €**	4,264.00 €
Automatic transfer switch 22.00 kW	569.9500.022	**3,708.40 €**	4,413.00 €
Overvoltage protection (lightning protection)	567.9004.000	**1,015.97 €**	1,209.00 €
GSM emergency phone line	567.9001.000	**1,068.91 €**	1,272.00 €
Drinking water isolation Rp 2“	567.9002.050	**1,736.13 €**	2,066.00 €
Drinking water isolation DN 65	567.9002.065	**2,639.50 €**	3,141.00 €
Drinking water isolation DN 80	567.9002.080	**4,681.51 €**	5,571.00 €
Drinking water isolation DN 100	567.9002.100	**4,934.45 €**	5,872.00 €
Pressure reducing disc, stainless steel, variabel	567.9005.010	**36.64 €**	43.60 €
Pressure reducing disc, stainless steel, 10 mm	567.9005.110	**36.64 €**	43.60 €
Pressure reducing disc, stainless steel, 11 mm	567.9005.111	**36.64 €**	43.60 €
Pressure reducing disc, stainless steel, 12 mm	567.9005.112	**36.64 €**	43.60 €
Pressure reducing disc, stainless steel, 13 mm	567.9005.113	**36.64 €**	43.60 €
Pressure reducing disc, stainless steel, 14 mm	567.9005.114	**36.64 €**	43.60 €
Pressure reducing disc, stainless steel, 15 mm	567.9005.115	**36.64 €**	43.60 €

FEUERCELL II

Dimensions

Feuercell II FC 15-40 to FC 15-100

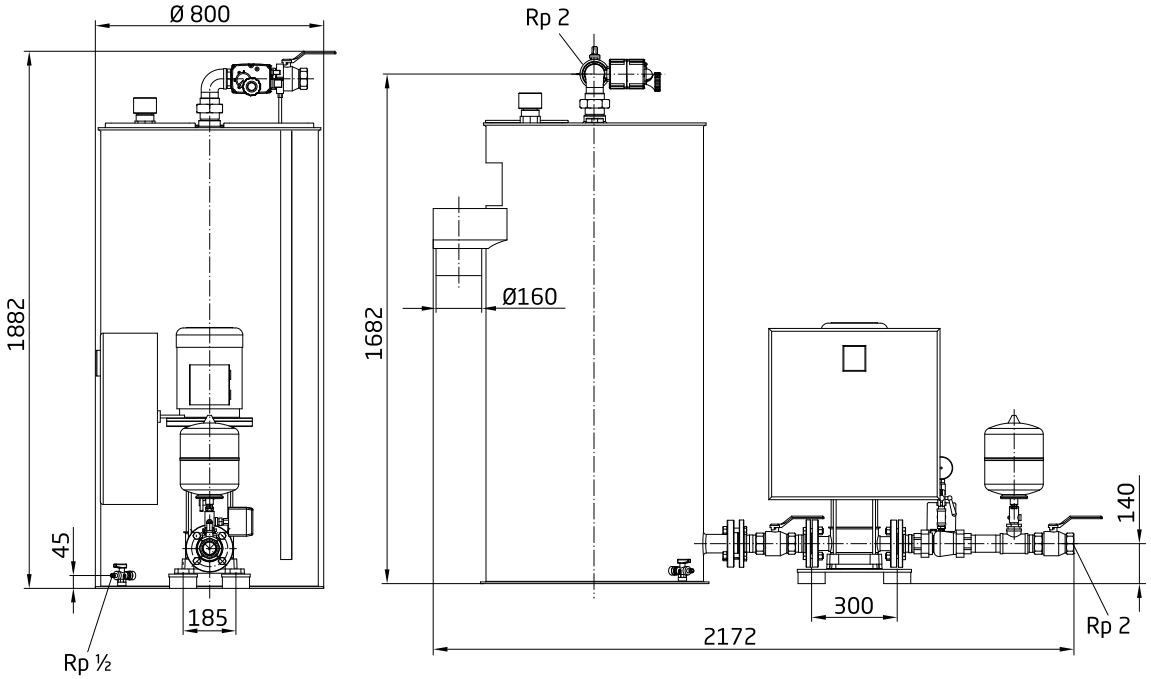

Feuercell II FC 40-20 to FC 40-60

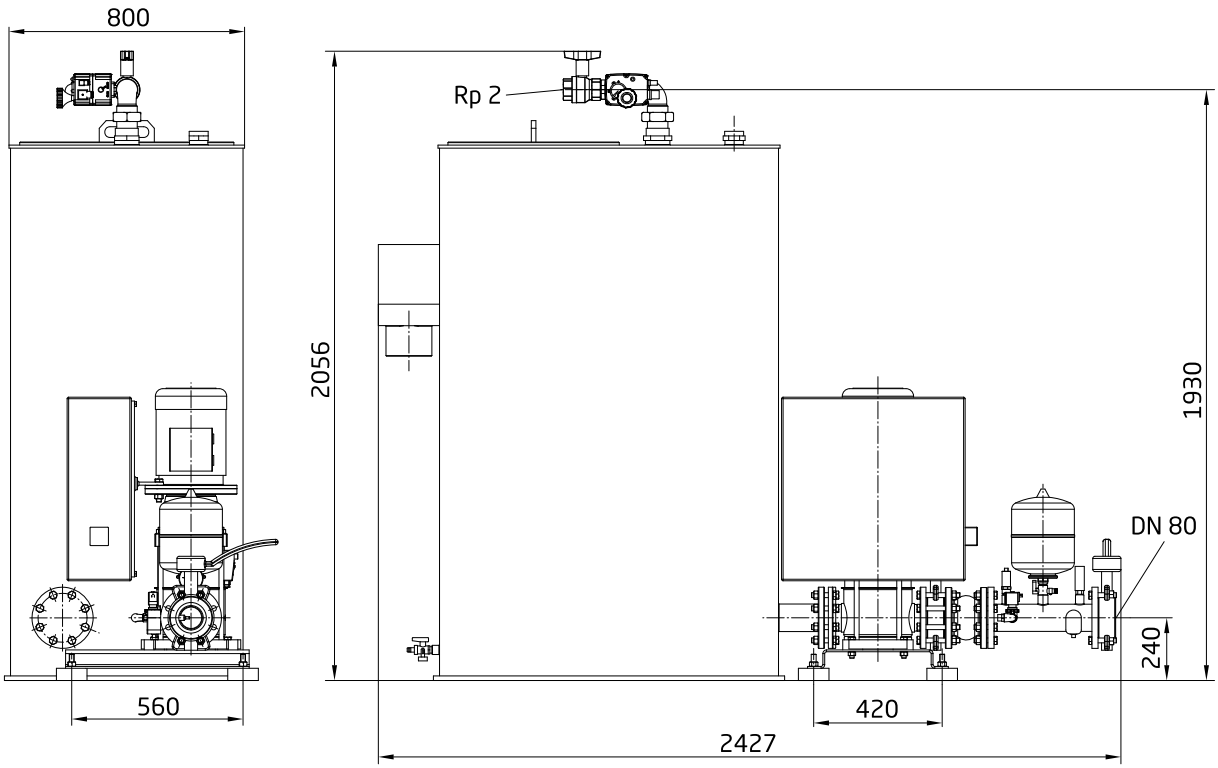

MULTICELL II

Dimensions

Multicell II S 2/15-40 to S 2/15-100

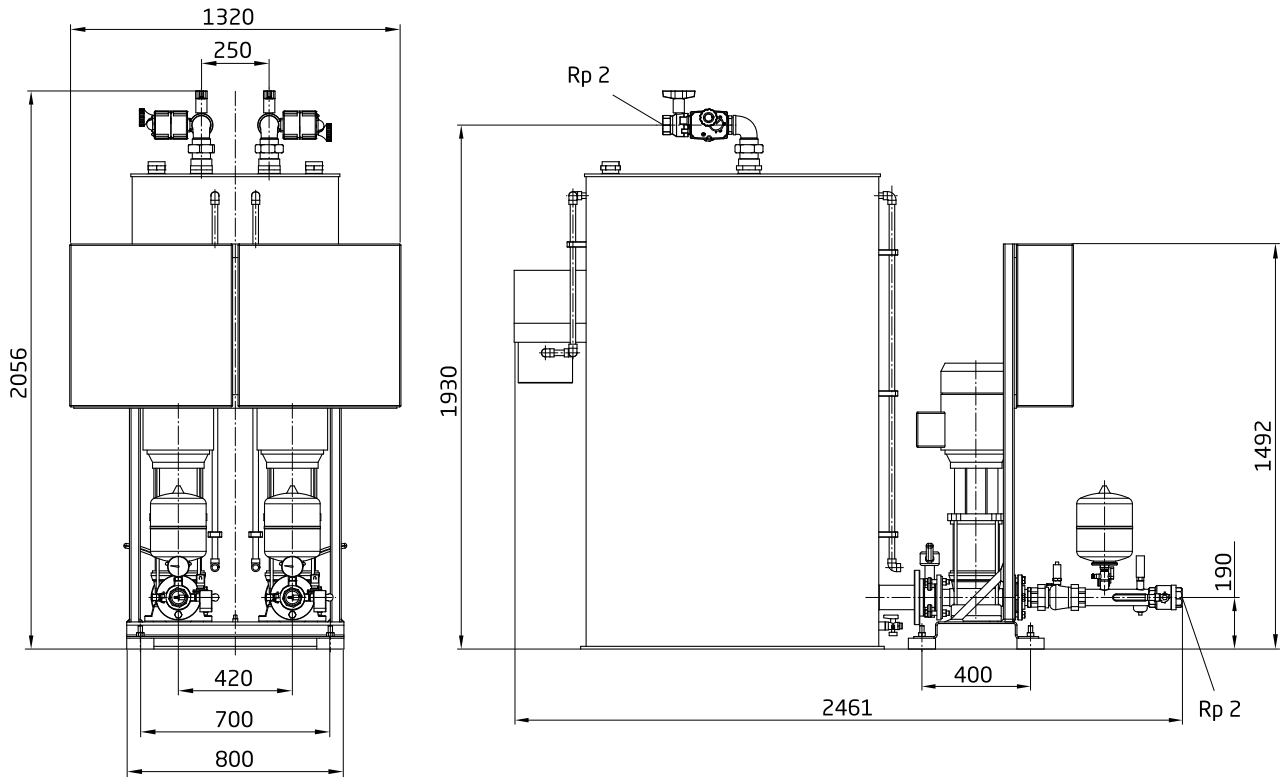

Multicell II S 2/40-20 to S 2/40-60

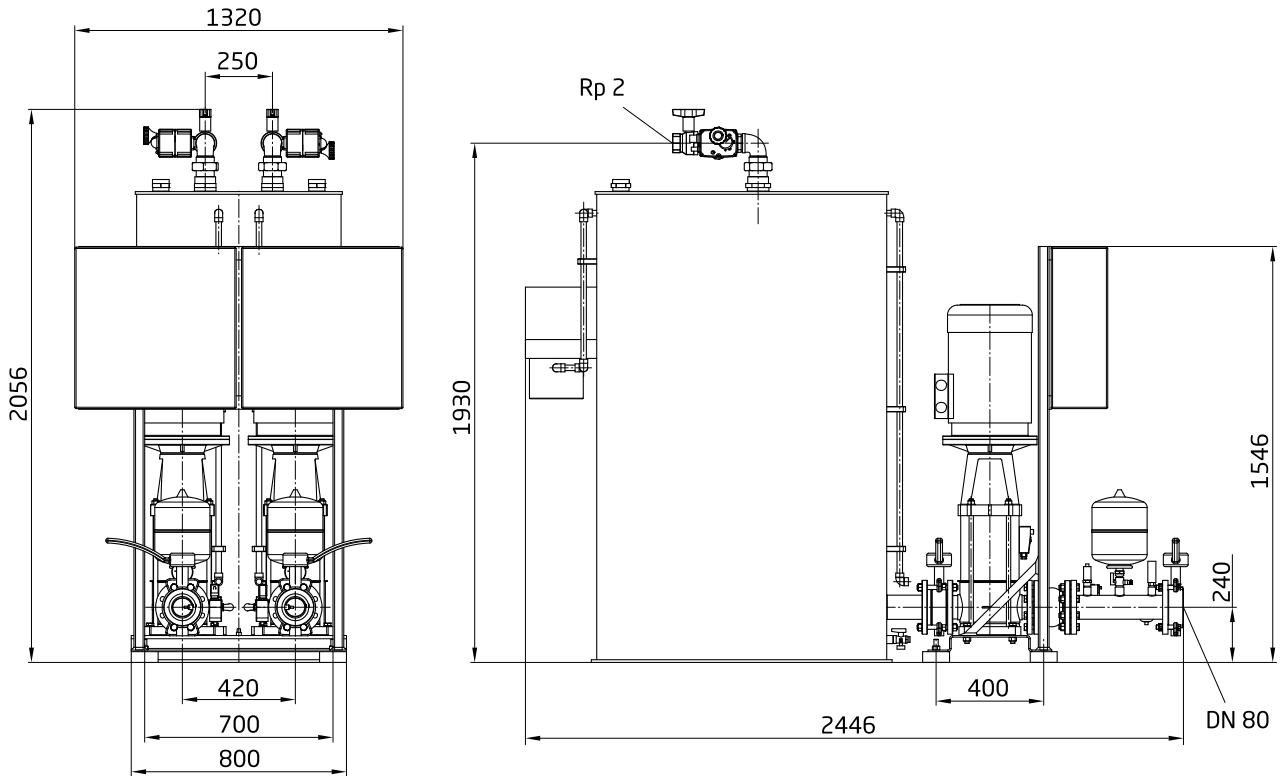

ACCESSORIES

FEUERCELL II/MULTICELL II

Emergency drainage for Feuercell II FC 15

Emergency drainage design consisting of:
1 overflow tank with 2 triple cable glands and stabilising chamber, width approx. 750 mm, depth approx. 500 mm, height approx. 1000 mm
5 electrodes each with 10 m cable, installed ready for operation. Other cable lengths on request.
1 control box type SUP-A, special edition
operating voltage 400 V, 50 Hz,
control voltage 230 V, 50 Hz,
plastic enclosed,
consisting of:
Control box housing, protection class IP 54
Air protection for direct activation
Motor protection switch, thermal and magnetic, setting range from 3.5 to 5.0 A
Electrode relay for pump's level control
Electrode relay for overflow alarm
Selector switch: manual-0-automatic
Control fuse
Potential-free message "high water level" for the pressure boosting unit's control box
1 submersible motor pump TOP 300 VOX D, 400 V, 50 Hz, 2.20 kW, with adapter nipple and elbow

Technical data

Flow rate (m^3/h)	Dynamic head at operating point (m)	Max. dynamic head (m)	Power output P_2 (kW)	Rated current (A)	Motor speed (rpm)	DND	Cable length (m)	Motor protection class
48	approx. 3.5	approx. 17	2.20	4.40	2800	Rp 3	10	IP 68

Materials used

Pump housing ..... stainless steel AISI 304
Motor housing ..... stainless steel AISI 304
Impeller ..... stainless steel AISI 304
Shaft ..... stainless steel AISI 303
O-rings ..... NBR
Pump side mechanical seal ..... SiC/SiC
Motor side mechanical seal ..... carbon/ceramic
Tank ..... PE

Order information

Type	Article no.	Net RRP	Gross RRP
Emergency drainage for FC 15, consisting of: **1 overflow tank** **5 electrodes** **1 submersible motor pump** **1 control box**	567.9006.020	**3,500.00 €**	

ACCESSORIES

FEUERCELL II/MULTICELL II

Emergency drainage for Feuercell II FC 40 and Multicell II S2

Emergency drainage design consisting of:
1 overflow tank with 3 triple cable glands and stabilising chamber, width approx. 750 mm, depth approx. 500 mm, height approx. 1000 mm
8 electrodes each with 10 m cable, installed ready for operation. Other cable lengths on request.
1 control box type S 2, special edition
operating voltage 400 V, 50 Hz,
control voltage 230 V, 50 Hz,
steel enclosed,
consisting of:
Control box housing, protection class IP 54
2 air protectors for direct activation
2 motor protection switches, thermal and magnetic, setting range from 3.5 to 5.0 A
2 electrode relays for pump's level control
1 electrode relay for overflow alarm
2 selector switches: manual-0-automatic
2 white light indicators for pump operation
2 red light indicators for excess current in pump motor
1 red light indicator for high water level
1 interchange relay
1 control fuse
Peak load activation
Potential-free message "high water level" for the pressure boosting unit's control box
2 submersible motor pumps TOP 300 VOX D, 400 V, 50 Hz, 2.20 kW, with adapter nipple and elbow

Technical data at 50 Hz

Flow rate (m^3/h)	Dynamic head at operating point (m)	Max. dynamic head (m)	Power output P_2 (kW)	Rated current (A)	Motor speed (rpm)	DND	Cable length (m)	Motor protection class
2 x 48	approx. 3.5	approx. 17	2 x 2.20	2 x 4.40	2800	2 x Rp 3	10	IP 68

Materials used

Pump housing ..... stainless steel AISI 304
Motor housing ..... stainless steel AISI 304
Impeller ..... stainless steel AISI 304
Shaft ..... stainless steel AISI 303
O-rings ..... NBR
Pump side mechanical seal ..... SiC/SiC
Motor side mechanical seal ..... carbon/ceramic
Tank ..... PE

Order information

Type	Article no.	Net RRP	Gross RRP
Emergency drainage for FC 40 and Multicell S2 consisting of: **1 overflow** **8 electrodes** **2 submersible motor pump** **1 control box**			

ACCESSORIES

FEUERCELL II/MULTICELL II

Extinguishing water feed, wet, type C

Extinguishing water feed design consisting of:
1 hanging cupboard, BxHxT 740x300x740 mm, according to DIN 14461-2, painted according to RAL 3001 (red), doors with countersunk fire hydrant valve according to DIN 14925, 180° opening
1 supply fitting (free-standing or hanging) according to DIN 14461-4 with two 45° curved inlets including B couplings made from brass as well as B blind couplings made from brass and ½" drain ball valve (only hanging design).
1 drain valve ½", hydraulic (free-standing design)
1 non-return valve DN 80, PN 16, spring loaded, housing made from cast iron, ECB coated with fluid plastic
1 ventilation valve G 2, according to DIN 14463-3
1 coupling key size B/C
1 self-adhesive film "Extinguishing water feed", "Drainage extinguishing water pipe", "Ventilation extinguishing water pipe", "max. feed pressure for emergency extinguishing water feed"
1 operating manual

Order information

Type	Article no.	Net RRP	Gross RRP
Extinguishing water feed type CH/RED	567.9002.000	**2,602.52 €**	3,097.00 €
Extinguishing water feed type CS/RED	567.9002.001	**2,602.52 €**	3,097.00 €
Extinguishing water feed type CH/VA	567.9002.002	**3,802.52 €**	4,525.00 €
Extinguishing water feed type CS/VA	567.9002.003	**3,802.52 €**	4,525.00 €

Vertical pumps

Product overview

IN-VB
Performance: 1 to 160 m³/h
Page 44

IN-VB

Vertical staged centrifugal pumps

Field of application
– Pressure boosting units
– Water treatment
– Irrigation
– Fire extinguishing systems
– Cooling water supply

Design
Multistage, vertical centrifugal pump. Equipped with ceramic, wear resistant, liquid lubricated bearings. Shaft seal in the form of a mechanical seal. The pump has the CE sign of approval and corresponds to the newest safety regulations.

Motor
Protection class .....IP 55
Class of insulation.....F
Voltage.....1~ 230 V ± 10 %
Voltage.....3~ 400/230 V ± 10 %
Speed.....2850 rpm
Frequency .....50 Hz
PTC resistor sensor.....>= 3.00 kW

Technical data
Flow rate.....Q up to max. 160 m³/h
Total dynamic head .....H up to max. 250 m
Fluid temperature .....t from -15 to max. 100 °C
Operating pressure.....p up to max. 25 bar

Pumped fluid
Clear, moderately aggressive fluids, which don't chemically and mechanically attack the pump materials.

Type key
IN-VB-S-L 15-60-F

IN-VB.....pump range description
AISI 304/oval flange
S.....wetted parts AISI 316 L
C.....cast iron housing with round flange
L.....low NPSH design
15.....pump size
60.....number of stages x 10
F.....round flange (V = Victaulic flange)

Special editions
– Special voltages
– Special elastomers
– Special mechanical seals
– Explosion-proof design
– Higher fluid temperatures
– Aggressive mediums

IN-VB

Materials used IN-VB 2 to IN-VB 60

Pump housing	stainless steel AISI CF8
Sleeve	stainless steel AISI 304
Diffusers	stainless steel AISI 304
Top plate	stainless steel AISI 304
Impellers	stainless steel AISI 304
Shaft sleeve	stainless steel AISI 304
Shaft	stainless steel AISI 431
Bearings	aluminium oxide
Shaft protection sleeve	tungsten carbide
Base plate	cast iron JS 1030
Lantern	cast iron JL 1040
Plug	stainless steel AISI 431
Elastomers	EPDM
Counter flange	cast iron JL 1040
Mechanical seal	carbon/SiC

Material used IN-VB 85/125

Pump housing	stainless steel AISI CF8
Sleeve	stainless steel AISI 304
Diffusers	stainless steel AISI CF8
Top plate	stainless steel AISI CF8
Impellers	stainless steel AISI CF8
Shaft sleeve	stainless steel AISI 304
Shaft	stainless steel AISI 431
Bearings	aluminium oxide
Shaft protection sleeve	tungsten carbide
Base plate	cast iron JS 1030
Lantern	cast iron JL 1040
Plug	stainless steel AISI 304
Elastomers	EPDM
Mechanical seal	carbon/SiC

Materials used IN-VB-S 2 to IN-VB-S 60

Pump housing	stainless steel AISI CF8M
Sleeve	stainless steel AISI 316 L
Diffusers	stainless steel AISI 316 L
Top plate	stainless steel AISI 316 L
Impellers	stainless steel AISI 316 L
Shaft sleeve	stainless steel AISI 316 L
Shaft	stainless steel AISI 329
Bearings	aluminium oxide
Shaft protection sleeve	tungsten carbide
Base plate	cast iron JS 1030
Lantern	cast iron JL 1040
Plug	stainless steel AISI 316 L
Elastomers	VITON
Counter flange	stainless steel AISI CF8M
Mechanical seal	carbon/SiC

Material used IN-VB-S 85/125

Pump housing	stainless steel AISI CF8M
Sleeve	stainless steel AISI 316 L
Diffusers	stainless steel AISI CF8M
Top plate	stainless steel AISI CF8M
Impellers	stainless steel AISI CF8M
Shaft sleeve	stainless steel AISI 316 L
Shaft	stainless steel AISI 329
Bearings	aluminium oxide
Shaft protection sleeve	tungsten carbide
Base plate	cast iron JS 1030
Lantern	cast iron JL 1040
Plug	stainless steel AISI 316 L
Elastomers	VITON
Mechanical seal	carbon/SiC

Motor data

P [kW]		0.37	0.55	0.75	1.10	1.50	2.20	3.00	4.00	5.50
I_N [A]	3~ 400V	0.95	1.20	1.80	2.30	3.20	4.60	5.80	7.40	10.00
$I_{max.}$ [A]	3~ 400V	1.40	1.50	2.40	3.10	4.60	6.20	7.50	9.80	15.00

P [kW]		7.50	11.00	15.00	18.50	22.00	30.00	37.00	45.00
I_N [A]	3~ 400V	13.30	19.30	26.20	32.10	38.10	51.60	63.30	76.80
$I_{max.}$ [A]	3~ 400V	18.10	27.00	36.70	40.30	53.70	59.30	72.80	88.30

IN-VB 2

Characteristics

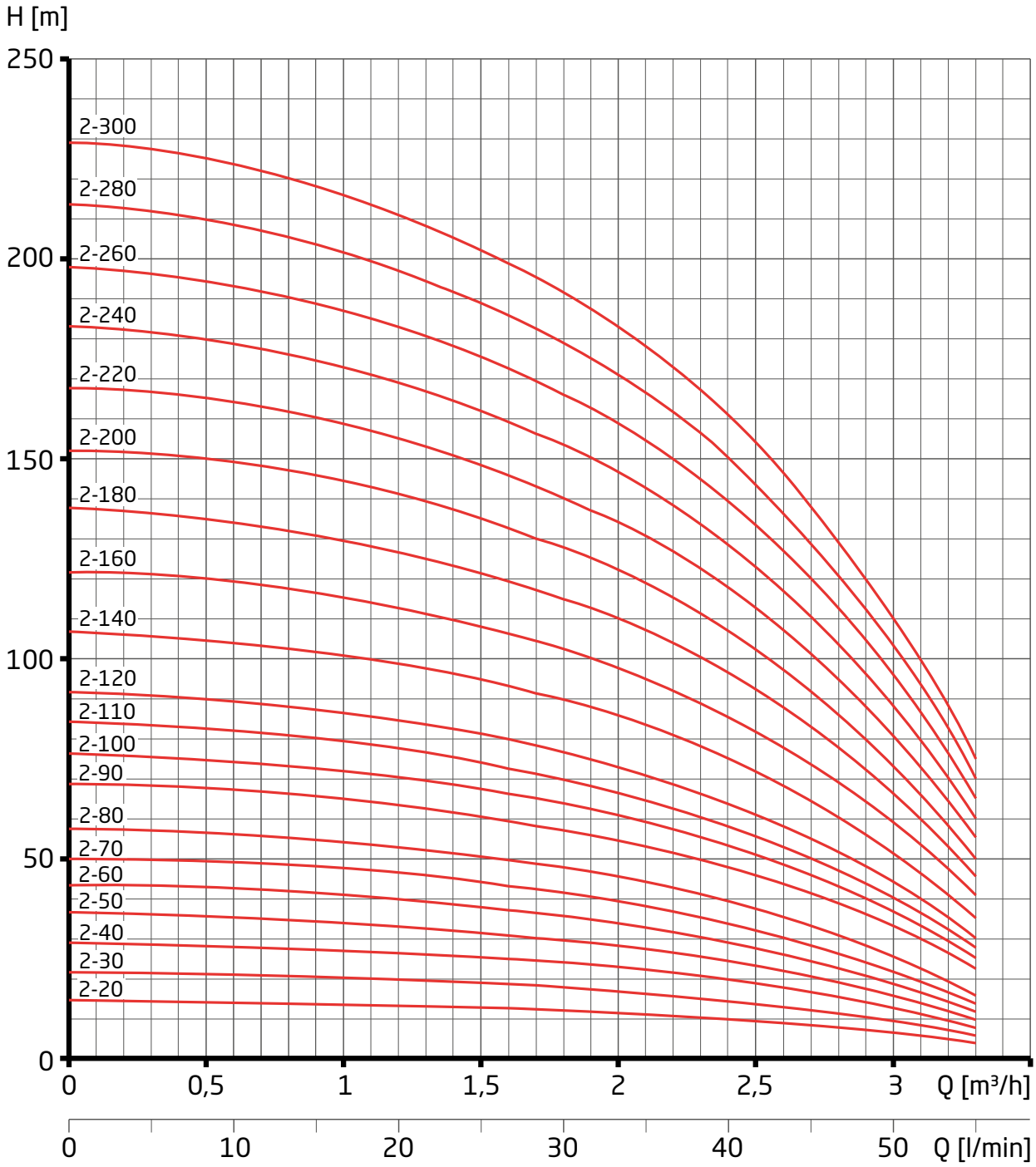

IN-VB 4

Characteristics

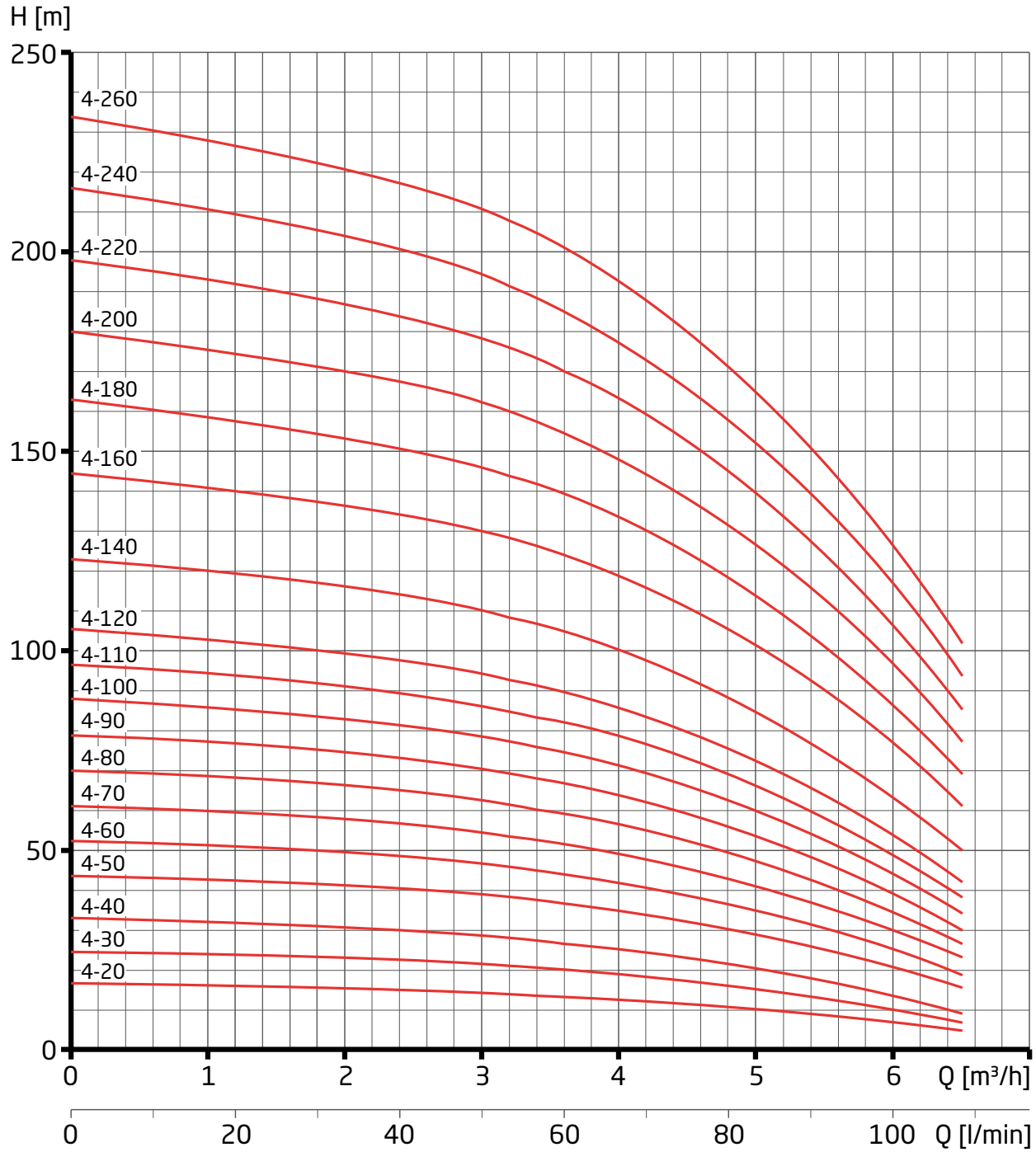

IN-VB 6

Characteristics

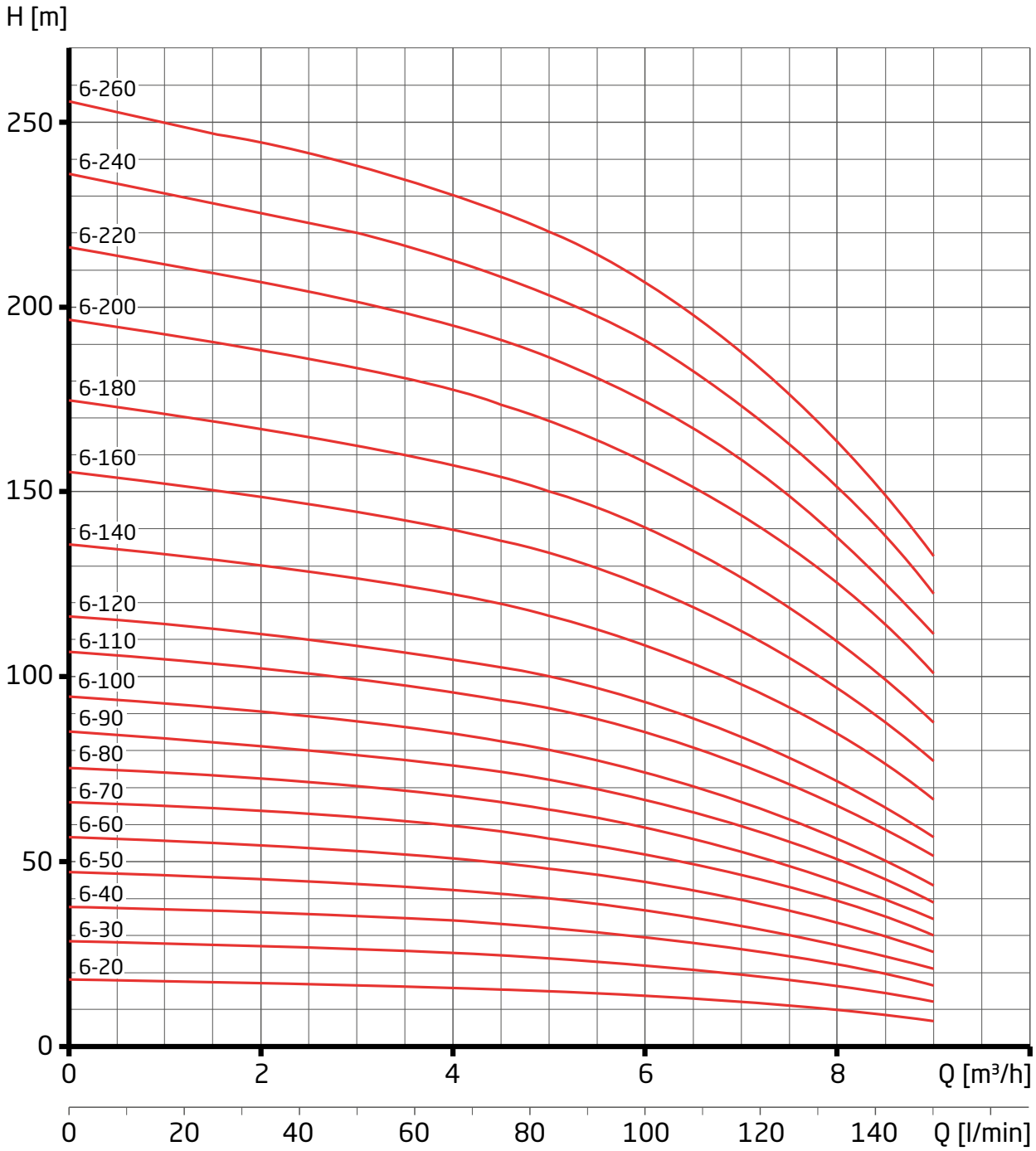

IN-VB 10

Characteristics

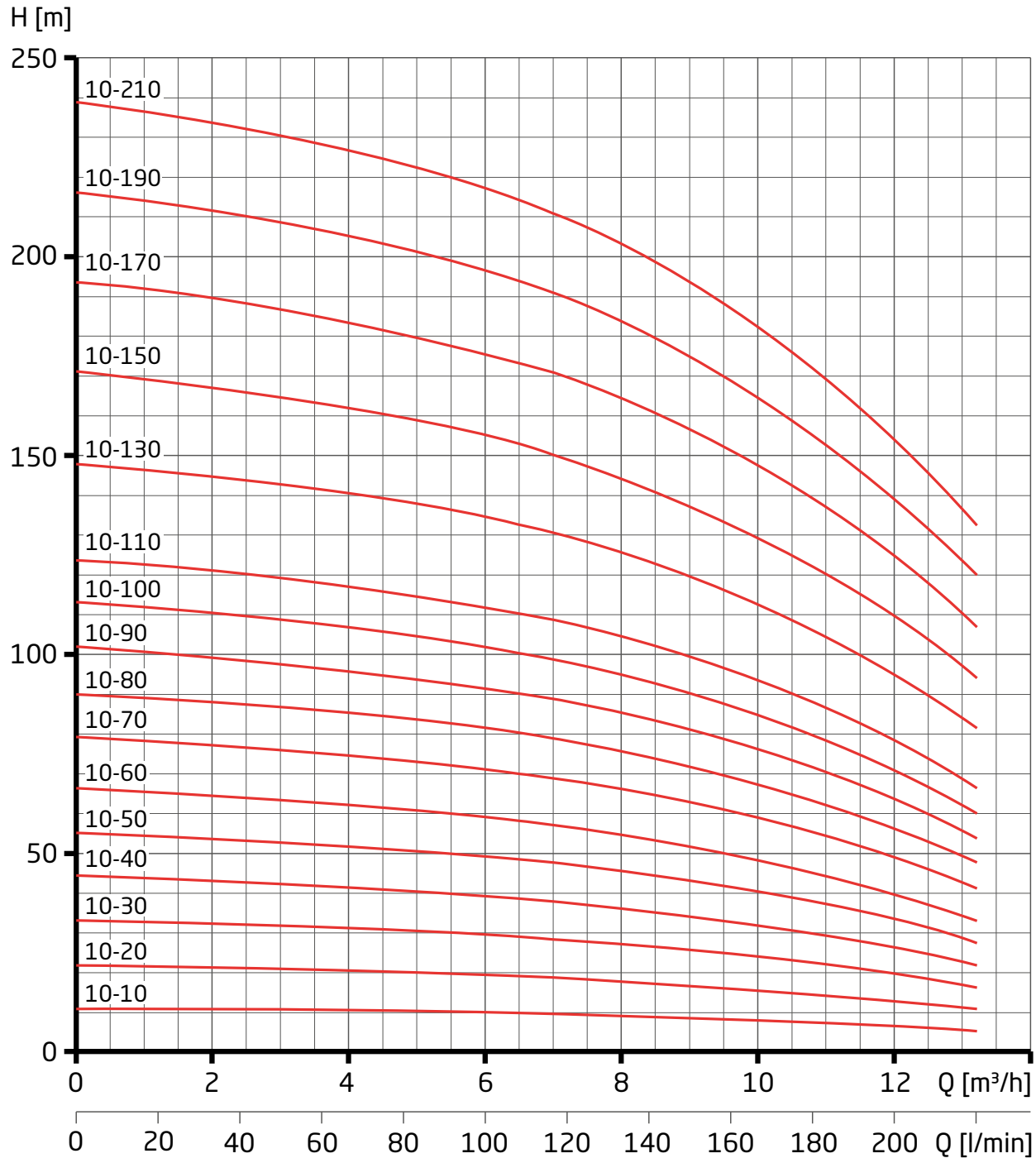

IN-VB 15

Characteristics

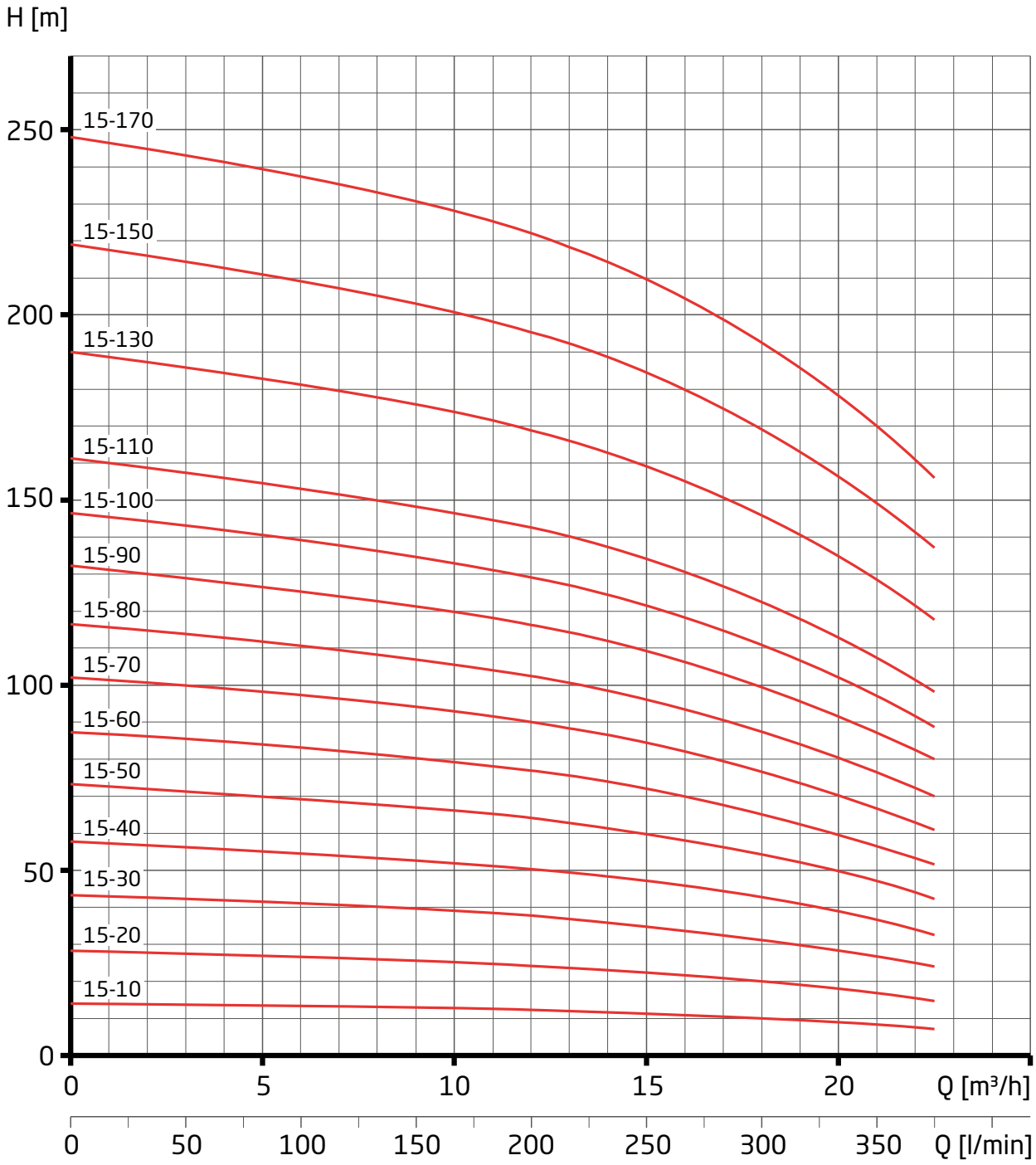

IN-VB 25

Characteristics

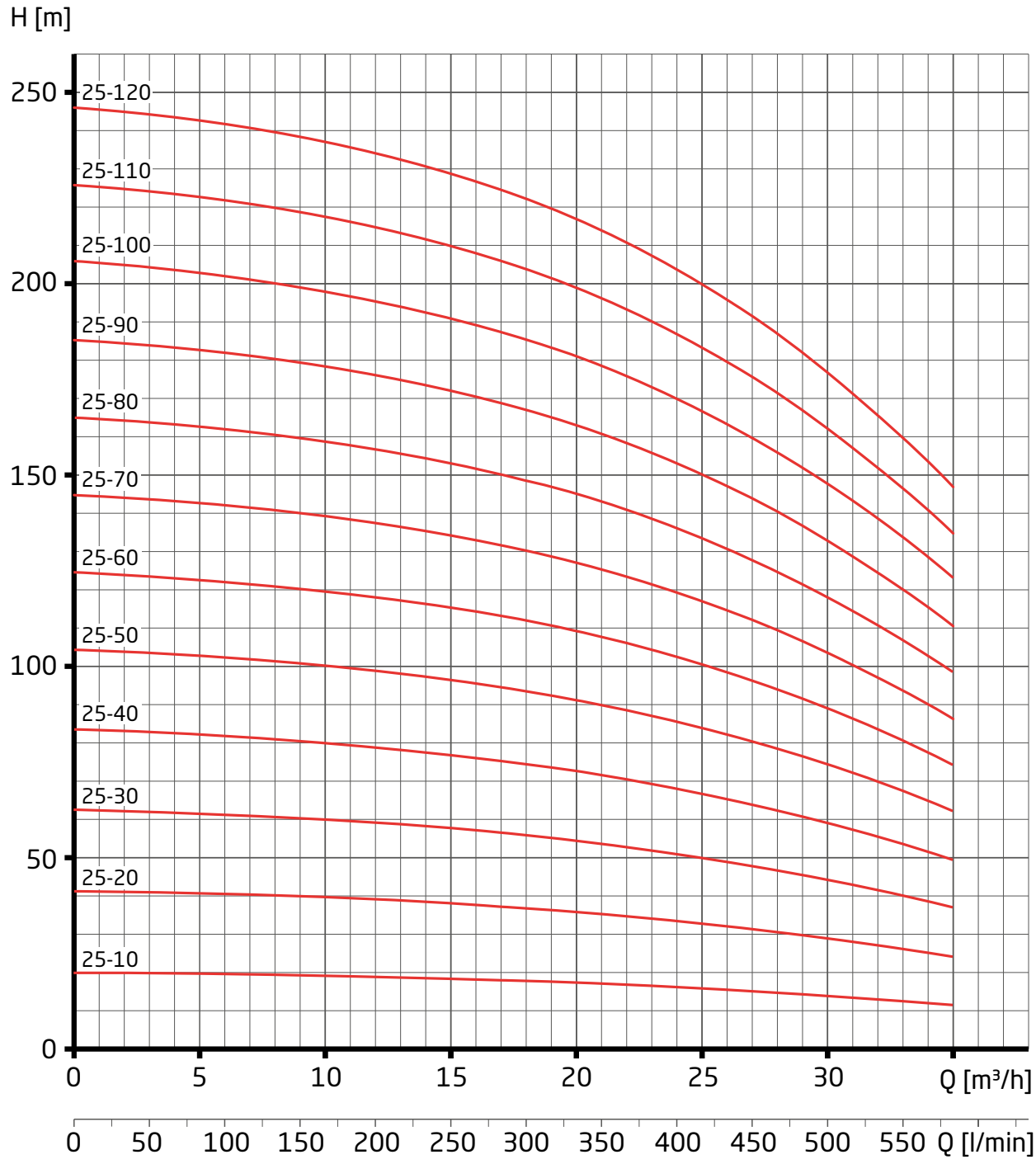

IN-VB 40

Characteristics

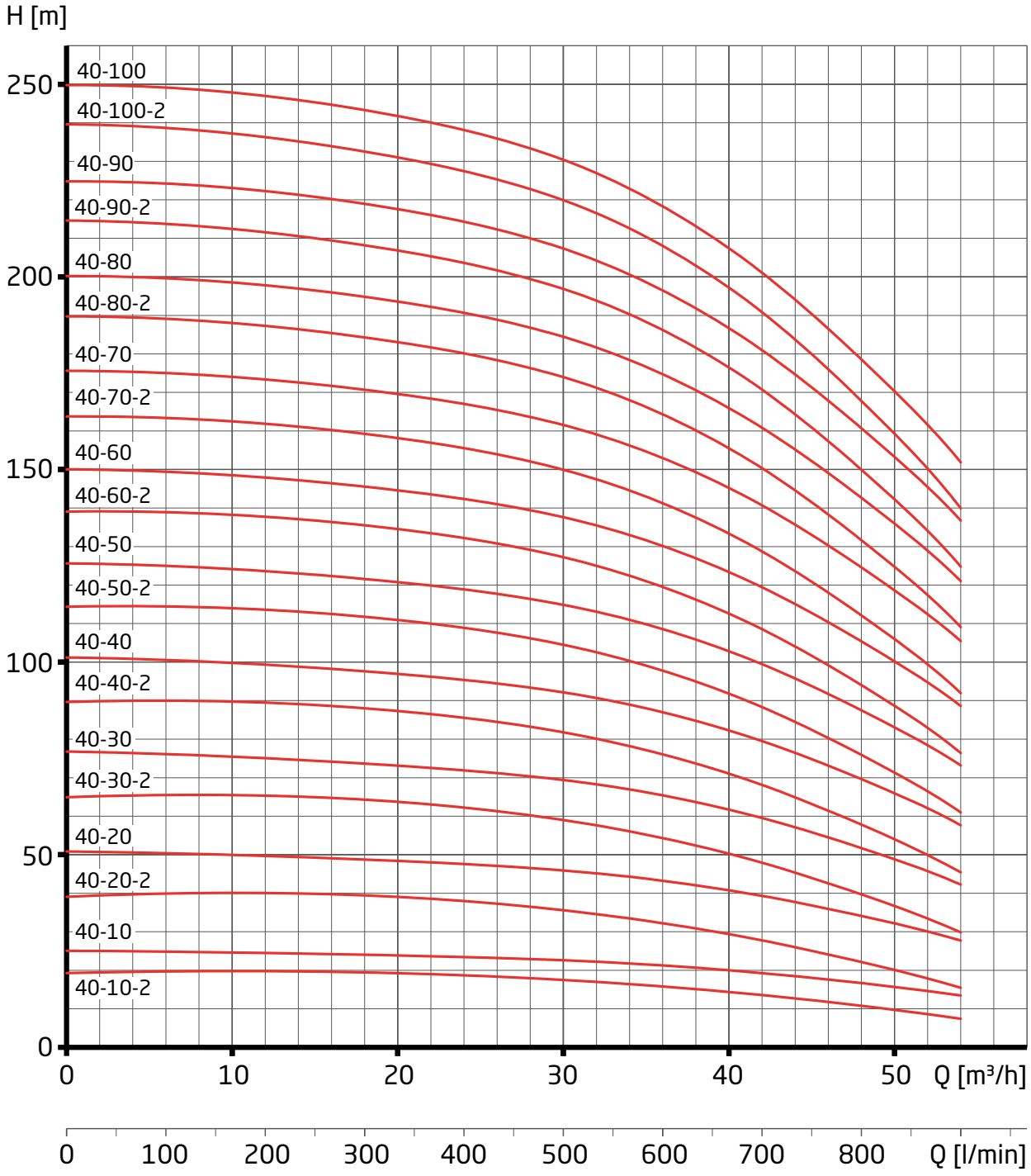

IN-VB 60

Characteristics

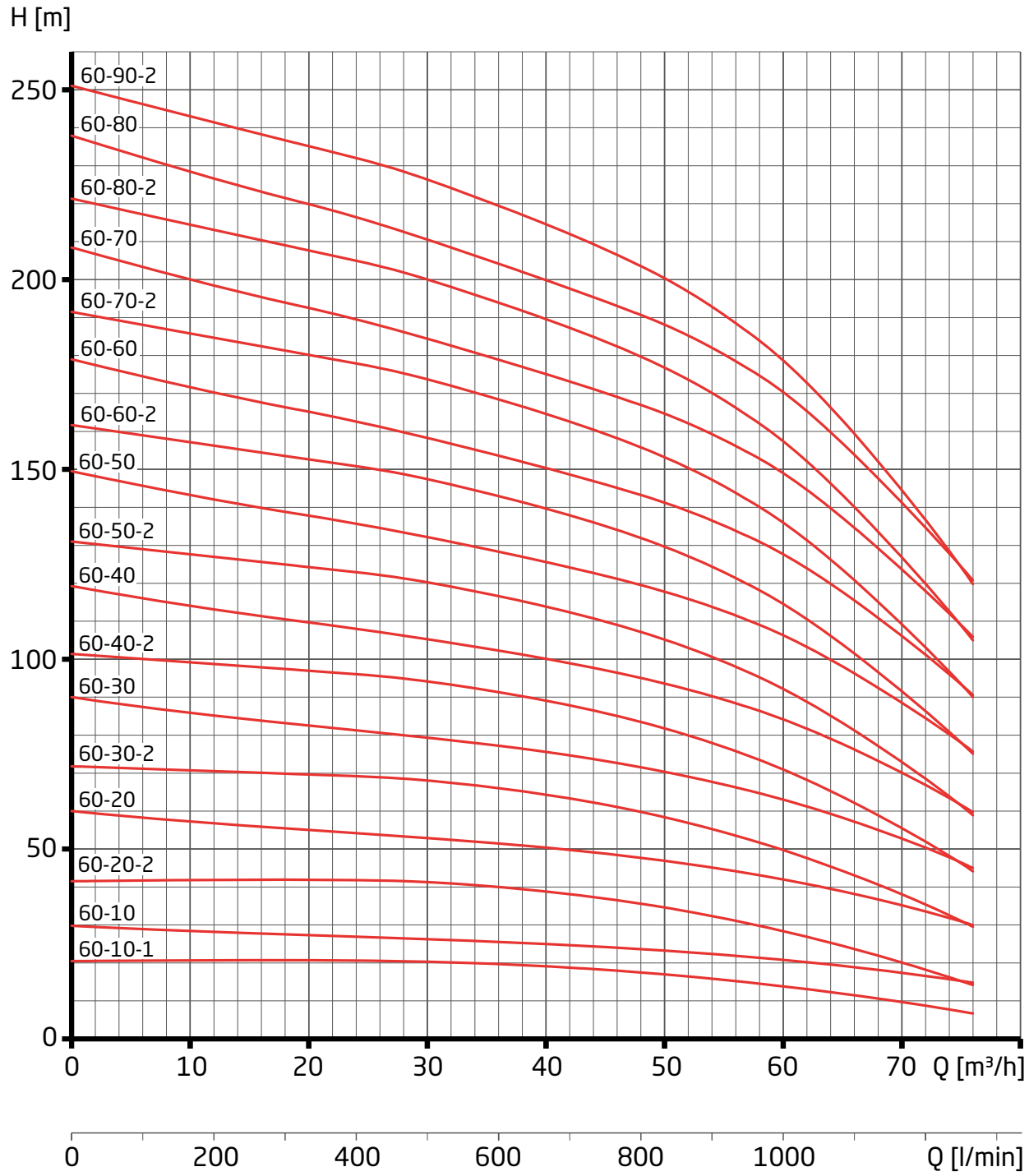

IN-VB 85

Characteristics

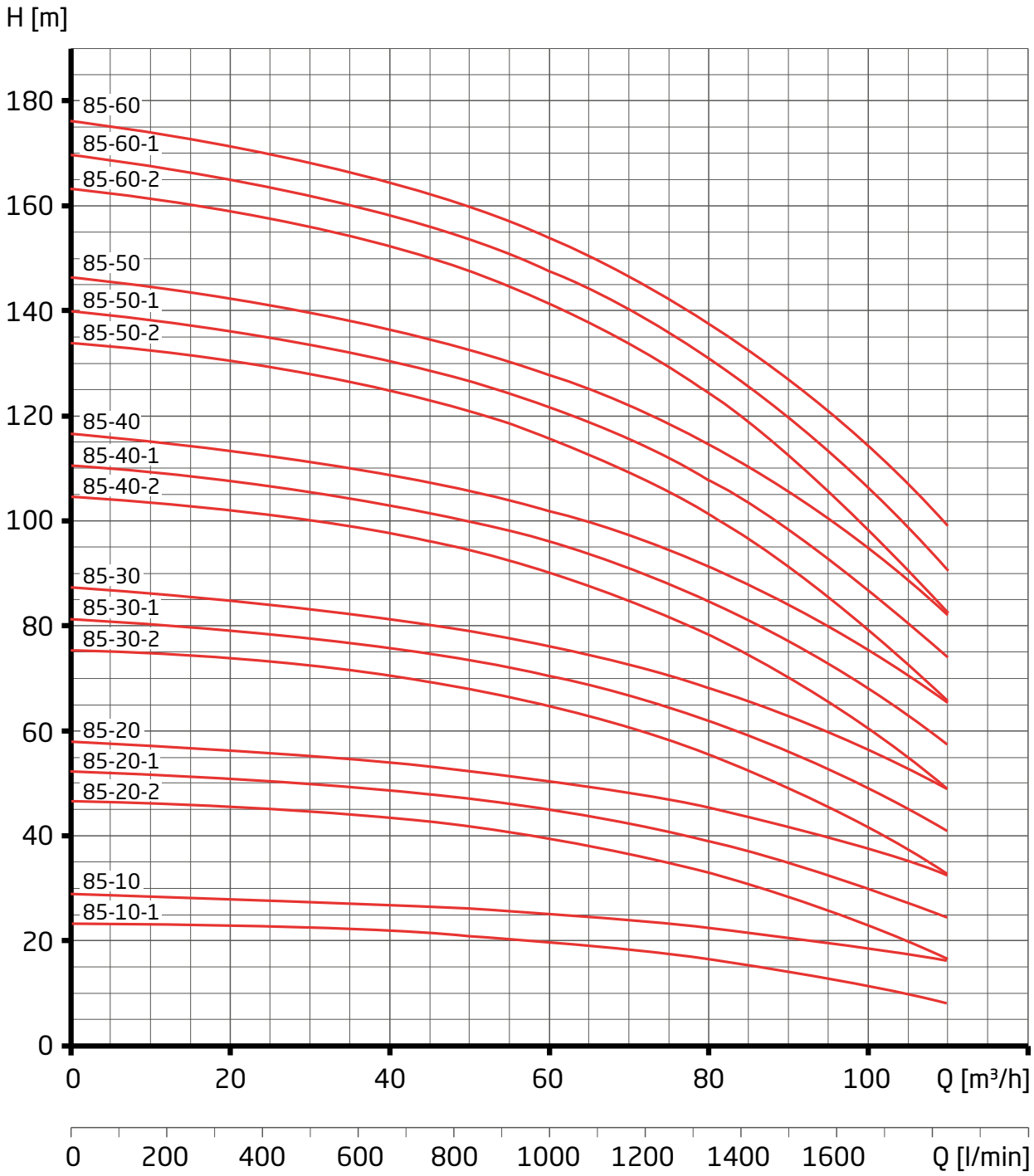

IN-VB 125

Characteristics

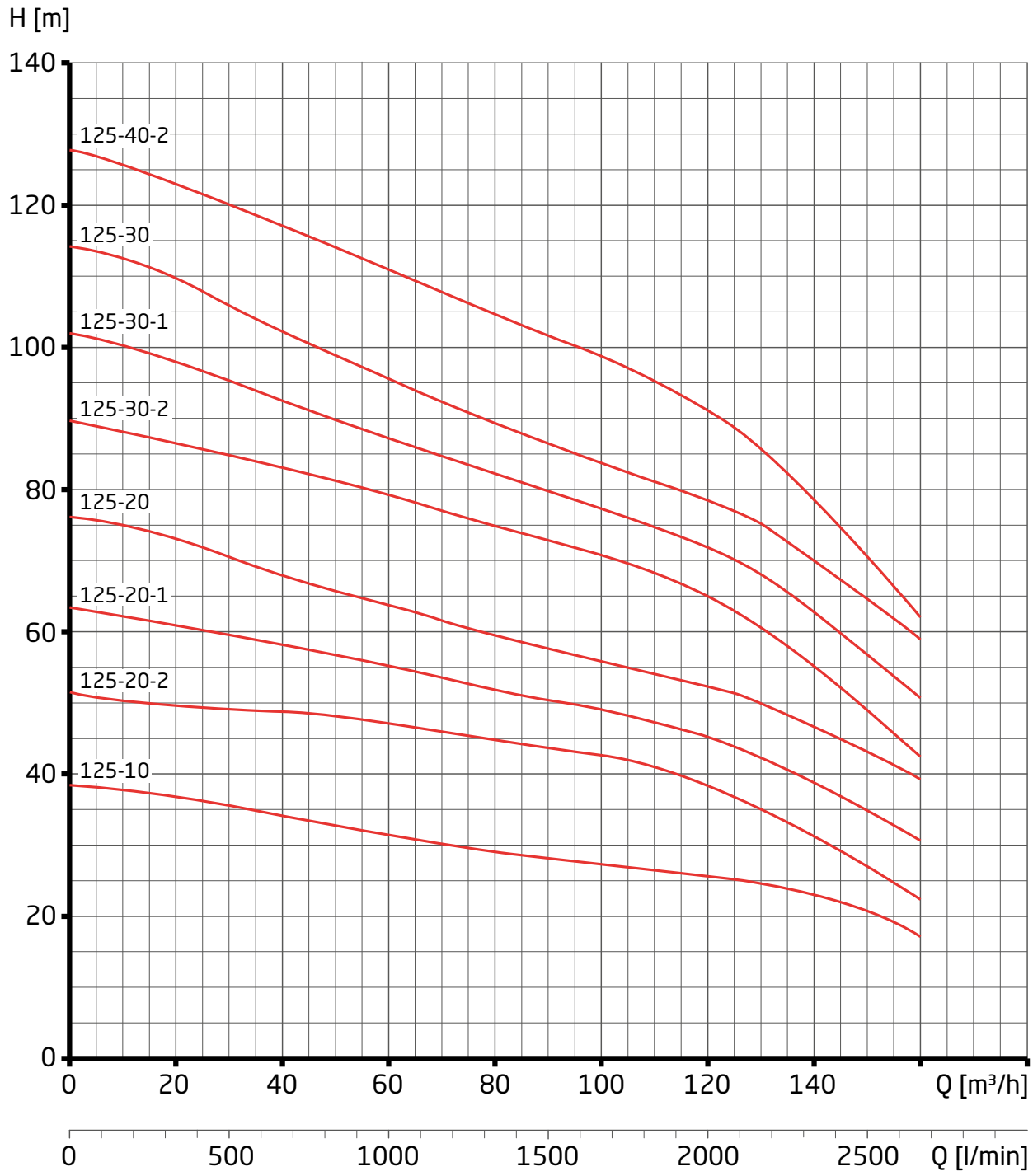

IN-VB

Technical data

Type	Inlet connection	Outlet connection	Power output P_2 (kW)	Rated current (A) 3~ 400 V	Approx. weight (kg)
IN-VB(-S) 2-20	Rp 1	Rp 1	0.37	0.95	18.00
IN-VB(-S) 2-30	Rp 1	Rp 1	0.37	0.95	18.00
IN-VB(-S) 2-40	Rp 1	Rp 1	0.37	0.95	18.00
IN-VB(-S) 2-50	Rp 1	Rp 1	0.37	0.95	19.00
IN-VB(-S) 2-60	Rp 1	Rp 1	0.55	1.20	19.00
IN-VB(-S) 2-70	Rp 1	Rp 1	0.55	1.20	20.00
IN-VB(-S) 2-80	Rp 1	Rp 1	0.55	1.20	20.00
IN-VB(-S) 2-90	Rp 1	Rp 1	0.75	1.80	27.00
IN-VB(-S) 2-100	Rp 1	Rp 1	0.75	1.80	27.00
IN-VB(-S) 2-110	Rp 1	Rp 1	1.10	2.30	28.00
IN-VB(-S) 2-120	Rp 1	Rp 1	1.10	2.30	28.00
IN-VB(-S) 2-140	Rp 1	Rp 1	1.10	2.30	29.00
IN-VB(-S) 2-160	Rp 1	Rp 1	1.50	3.20	36.00
IN-VB(-S) 2-180	Rp 1	Rp 1	1.50	3.20	36.00
IN-VB(-S) 2-200	Rp 1	Rp 1	1.50	3.20	37.00
IN-VB(-S) 2-220 F	DN 25	DN 25	2.20	4.60	46.00
IN-VB(-S) 2-240 F	DN 25	DN 25	2.20	4.60	46.00
IN-VB(-S) 2-260 F	DN 25	DN 25	2.20	4.60	47.00
IN-VB(-S) 2-280 F	DN 25	DN 25	2.20	4.60	48.00
IN-VB(-S) 2-300 F	DN 25	DN 25	2.20	4.60	64.00
IN-VB(-S) 4-20	Rp 1 ¼	Rp 1 ¼	0.37	0.95	18.00
IN-VB(-S) 4-30	Rp 1 ¼	Rp 1 ¼	0.55	1.20	18.00
IN-VB(-S) 4-40	Rp 1 ¼	Rp 1 ¼	0.55	1.20	19.00
IN-VB(-S) 4-50	Rp 1 ¼	Rp 1 ¼	0.75	1.80	25.00
IN-VB(-S) 4-60	Rp 1 ¼	Rp 1 ¼	1.10	2.30	26.00
IN-VB(-S) 4-70	Rp 1 ¼	Rp 1 ¼	1.10	2.30	26.00
IN-VB(-S) 4-80	Rp 1 ¼	Rp 1 ¼	1.50	3.20	32.00
IN-VB(-S) 4-90	Rp 1 ¼	Rp 1 ¼	1.50	3.20	33.00
IN-VB(-S) 4-100	Rp 1 ¼	Rp 1 ¼	1.50	3.20	33.00
IN-VB(-S) 4-110	Rp 1 ¼	Rp 1 ¼	2.20	4.60	34.00
IN-VB(-S) 4-120	Rp 1 ¼	Rp 1 ¼	2.20	4.60	35.00
IN-VB(-S) 4-140	Rp 1 ¼	Rp 1 ¼	2.20	4.60	36.00
IN-VB(-S) 4-160	Rp 1 ¼	Rp 1 ¼	3.00	5.80	47.00
IN-VB(-S) 4-180 F	DN 32	DN 32	3.00	5.80	53.00
IN-VB(-S) 4-200 F	DN 32	DN 32	3.00	5.80	53.00
IN-VB(-S) 4-220 F	DN 32	DN 32	4.00	7.40	61.00
IN-VB(-S) 4-240 F	DN 32	DN 32	4.00	7.40	62.00
IN-VB(-S) 4-260 F	DN 32	DN 32	4.00	7.40	78.00
IN-VB(-S) 6-20	Rp 1 ¼	Rp 1 ¼	0.37	0.95	18.00
IN-VB(-S) 6-30	Rp 1 ¼	Rp 1 ¼	0.75	1.80	25.00
IN-VB(-S) 6-40	Rp 1 ¼	Rp 1 ¼	1.10	2.30	25.00
IN-VB(-S) 6-50	Rp 1 ¼	Rp 1 ¼	1.10	2.30	26.00
IN-VB(-S) 6-60	Rp 1 ¼	Rp 1 ¼	1.50	3.20	32.00
IN-VB(-S) 6-70	Rp 1 ¼	Rp 1 ¼	1.50	3.20	32.00
IN-VB(-S) 6-80	Rp 1 ¼	Rp 1 ¼	2.20	4.60	34.00
IN-VB(-S) 6-90	Rp 1 ¼	Rp 1 ¼	2.20	4.60	34.00
IN-VB(-S) 6-100	Rp 1 ¼	Rp 1 ¼	2.20	4.60	35.00
IN-VB(-S) 6-110	Rp 1 ¼	Rp 1 ¼	3.00	5.80	45.00
IN-VB(-S) 6-120	Rp 1 ¼	Rp 1 ¼	3.00	5.80	46.00
IN-VB(-S) 6-140	Rp 1 ¼	Rp 1 ¼	3.00	5.80	47.00
IN-VB(-S) 6-160	Rp 1 ¼	Rp 1 ¼	4.00	7.40	51.00
IN-VB(-S) 6-180 F	DN 32	DN 32	4.00	7.40	62.00
IN-VB(-S) 6-200 F	DN 32	DN 32	5.50	10.00	97.00
IN-VB(-S) 6-220 F	DN 32	DN 32	5.50	10.00	98.00
IN-VB(-S) 6-240 F	DN 32	DN 32	5.50	10.00	99.00
IN-VB(-S) 6-260 F	DN 32	DN 32	5.50	10.00	100.00

IN-VB

Technical data

Type	Inlet connection	Outlet connection	Power output P_2 (kW)	Rated current (A) 3~ 400 V	Approx. weight (kg)
IN-VB(-S) 10-10	Rp 1 ½	Rp 1 ½	0.75	1.80	32.00
IN-VB(-S) 10-20	Rp 1½	Rp 1 ½	0.75	1.80	33.00
IN-VB(-S) 10-30	Rp 1 ½	Rp 1 ½	1.10	2.30	36.00
IN-VB(-S) 10-40	Rp 1 ½	Rp 1 ½	1.50	3.20	41.00
IN-VB(-S) 10-50	Rp 1 ½	Rp 1 ½	2.20	4.60	45.00
IN-VB(-S) 10-60	Rp 1 ½	Rp 1 ½	2.20	4.60	45.00
IN-VB(-S) 10-70	Rp 1 ½	Rp 1 ½	3.00	5.80	54.00
IN-VB(-S) 10-80	Rp 1 ½	Rp 1 ½	3.00	5.80	55.00
IN-VB(-S) 10-90	Rp 1 ½	Rp 1 ½	4.00	7.40	62.00
IN-VB(-S) 10-100	Rp 1 ½	Rp 1 ½	4.00	7.40	63.00
IN-VB(-S) 10-110	Rp 1 ½	Rp 1 ½	4.00	7.40	64.00
IN-VB(-S) 10-130	Rp 1 ½	Rp 1 ½	5.50	10.00	104.00
IN-VB(-S) 10-150 F	DN 40	DN 40	5.50	10.00	108.00
IN-VB(-S) 10-170 F	DN 40	DN 40	7.50	13.30	116.00
IN-VB(-S) 10-190 F	DN 40	DN 40	7.50	13.30	118.00
IN-VB(-S) 10-210 F	DN 40	DN 40	7.50	13.30	120.00
IN-VB(-S) 15-10 F	DN 50	DN 50	1.10	2.30	40.00
IN-VB(-S) 15-20 F	DN 50	DN 50	2.20	4.60	47.00
IN-VB(-S) 15-30 F	DN 50	DN 50	3.00	5.80	56.00
IN-VB(-S) 15-40 F	DN 50	DN 50	4.00	7.40	62.00
IN-VB(-S) 15-50 F	DN 50	DN 50	5.50	10.00	101.00
IN-VB(-S) 15-60 F	DN 50	DN 50	5.50	10.00	102.00
IN-VB(-S) 15-70 F	DN 50	DN 50	7.50	13.30	107.00
IN-VB(-S) 15-80 F	DN 50	DN 50	7.50	13.30	109.00
IN-VB(-S) 15-90 F	DN 50	DN 50	11.00	19.30	186.00
IN-VB(-S) 15-100 F	DN 50	DN 50	11.00	19.30	187.00
IN-VB(-S) 15-110 F	DN 50	DN 50	11.00	19.30	188.00
IN-VB(-S) 15-130 F	DN 50	DN 50	15.00	26.20	203.00
IN-VB(-S) 15-150 F	DN 50	DN 50	15.00	26.20	205.00
IN-VB(-S) 15-170 F	DN 50	DN 50	15.00	26.20	207.00
IN-VB(-S) 25-10 F	DN 65	DN 65	2.20	4.60	70.00
IN-VB(-S) 25-20 F	DN 65	DN 65	4.00	7.40	85.00
IN-VB(-S) 25-30 F	DN 65	DN 65	5.50	10.00	114.00
IN-VB(-S) 25-40 F	DN 65	DN 65	7.50	13.30	121.00
IN-VB(-S) 25-50 F	DN 65	DN 65	11.00	19.30	203.00
IN-VB(-S) 25-60 F	DN 65	DN 65	11.00	19.30	206.00
IN-VB(-S) 25-70 F	DN 65	DN 65	15.00	26.20	218.00
IN-VB(-S) 25-80 F	DN 65	DN 65	15.00	26.20	218.00
IN-VB(-S) 25-90 F	DN 65	DN 65	15.00	26.20	231.00
IN-VB(-S) 25-100 F	DN 65	DN 65	18.50	32.10	251.00
IN-VB(-S) 25-110 F	DN 65	DN 65	18.50	32.10	253.00
IN-VB(-S) 25-120 F	DN 65	DN 65	22.00	38.10	294.00
IN-VB(-S) 40-10-1 F	DN 80	DN 80	3.00	5.80	92.00
IN-VB(-S) 40-10 F	DN 80	DN 80	4.00	7.40	98.00
IN-VB(-S) 40-20- 2 F	DN 80	DN 80	5.50	10.00	129.00
IN-VB(-S) 40-20 F	DN 80	DN 80	7.50	13.30	133.00
IN-VB(-S) 40-30-2 F	DN 80	DN 80	11.00	19.30	214.00
IN-VB(-S) 40-30 F	DN 80	DN 80	11.00	19.30	214.00
IN-VB(-S) 40-40-2 F	DN 80	DN 80	15.00	26.20	230.00
IN-VB(-S) 40-40 F	DN 80	DN 80	15.00	26.20	230.00
IN-VB(-S) 40-50-2 F	DN 80	DN 80	18.50	32.10	261.00
IN-VB(-S) 40-50 F	DN 80	DN 80	18.50	32.10	261.00
IN-VB(-S) 40-60-2 F	DN 80	DN 80	18.50	32.10	264.00
IN-VB(-S) 40-60 F	DN 80	DN 80	22.00	38.10	300.00

IN-VB

Technical data

Type	Inlet connection	Outlet connection	Power output P_2 (kW)	Rated current (A) 3~ 400 V	Approx. weight (kg)
IN-VB(-S) 40-70-2 F	DN 80	DN 80	22.00	38.10	308.00
IN-VB(-S) 40-70 F	DN 80	DN 80	30.00	51.60	374.00
IN-VB(-S) 40-80-2 F	DN 80	DN 80	30.00	51.60	397.00
IN-VB(-S) 40-80 F	DN 80	DN 80	30.00	51.60	397.00
IN-VB(-S) 40-90-2 F	DN 80	DN 80	30.00	51.60	402.00
IN-VB(-S) 40-90 F	DN 80	DN 80	37.00	63.30	406.00
IN-VB(-S) 40-100-2 F	DN 80	DN 80	37.00	63.30	410.00
IN-VB(-S) 40-100 F	DN 80	DN 80	37.00	63.30	410.00
IN-VB(-S) 60-10-1 F	DN 100	DN 100	4.00	7.40	102.00
IN-VB(-S) 60-10 F	DN 100	DN 100	5.50	10.00	130.00
IN-VB(-S) 60-20-2 F	DN 100	DN 100	7.50	13.30	138.00
IN-VB(-S) 60-20 F	DN 100	DN 100	11.00	19.30	215.00
IN-VB(-S) 60-30-2 F	DN 100	DN 100	15.00	26.20	228.00
IN-VB(-S) 60-30 F	DN 100	DN 100	18.50	32.10	245.00
IN-VB(-S) 60-40-2 F	DN 100	DN 100	18.50	32.10	251.00
IN-VB(-S) 60-40 F	DN 100	DN 100	22.00	38.10	287.00
IN-VB(-S) 60-50-2 F	DN 100	DN 100	22.00	38.10	300.00
IN-VB(-S) 60-50 F	DN 100	DN 100	30.00	51.60	362.00
IN-VB(-S) 60-60-2 F	DN 100	DN 100	30.00	51.60	370.00
IN-VB(-S) 60-60 F	DN 100	DN 100	30.00	51.60	376.00
IN-VB(-S) 60-70-2 F	DN 100	DN 100	37.00	63.30	384.00
IN-VB(-S) 60-70 F	DN 100	DN 100	37.00	63.30	384.00
IN-VB(-S) 60-80-2 F	DN 100	DN 100	37.00	63.30	407.00
IN-VB(-S) 60-80 F	DN 100	DN 100	45.00	76.80	484.00
IN-VB(-S) 60-90-2 F	DN 100	DN 100	45.00	76.80	488.00
IN-VB(-S) 85-10-1 F	DN 100	DN 100	5.50	10.00	126.00
IN-VB(-S) 85-10 F	DN 100	DN 100	7.50	13.30	155.00
IN-VB(-S) 85-20-2 F	DN 100	DN 100	11.00	19.30	208.00
IN-VB(-S) 85-20-1 F	DN 100	DN 100	15.00	26.20	214.00
IN-VB(-S) 85-20 F	DN 100	DN 100	15.00	26.20	214.00
IN-VB(-S) 85-30-2 F	DN 100	DN 100	18.50	32.10	238.00
IN-VB(-S) 85-30-1 F	DN 100	DN 100	22.00	38.10	274.00
IN-VB(-S) 85-30 F	DN 100	DN 100	22.00	38.10	274.00
IN-VB(-S) 85-40-2 F	DN 100	DN 100	30.00	51.60	376.00
IN-VB(-S) 85-40-1 F	DN 100	DN 100	30.00	51.60	376.00
IN-VB(-S) 85-40 F	DN 100	DN 100	30.00	51.60	376.00
IN-VB(-S) 85-50-2 F	DN 100	DN 100	37.00	63.30	406.00
IN-VB(-S) 85-50-1 F	DN 100	DN 100	37.00	63.30	406.00
IN-VB(-S) 85-50 F	DN 100	DN 100	37.00	63.30	406.00
IN-VB(-S) 85-60-2 F	DN 100	DN 100	45.00	76.80	564.00
IN-VB(-S) 85-60-1 F	DN 100	DN 100	45.00	76.80	564.00
IN-VB(-S) 85-60 F	DN 100	DN 100	45.00	76.80	564.00
IN-VB(-S) 125-10 F	DN 125	DN 125	15.00	26.20	284.00
IN-VB(-S) 125-20-2 F	DN 125	DN 125	18.50	32.10	311.00
IN-VB(-S) 125-20-1 F	DN 125	DN 125	22.00	38.10	349.00
IN-VB(-S) 125-20 F	DN 125	DN 125	30.00	51.60	445.00
IN-VB(-S) 125-30-2 F	DN 125	DN 125	30.00	51.60	462.00
IN-VB(-S) 125-30-1 F	DN 125	DN 125	37.00	63.30	482.00
IN-VB(-S) 125-30 F	DN 125	DN 125	37.00	63.30	482.00
IN-VB(-S) 125-40-2 F	DN 125	DN 125	45.00	76.80	555.00

IN-VB

Order information

Type	Article no.	Net RRP	Gross RRP	Type	Article no.	Net RRP	Gross RRP
IN-VB 2-20	624.0202.067	507.56 €	604.00 €	IN-VB-S 2-20	624.0202.967	752.10 €	895.00 €
IN-VB 2-30	624.0203.067	514.29 €	612.00 €	IN-VB-S 2-30	624.0203.967	789.08 €	939.00 €
IN-VB 2-40	624.0204.067	546.22 €	650.00 €	IN-VB-S 2-40	624.0204.967	821.01 €	977.00 €
IN-VB 2-50	624.0205.067	585.71 €	697.00 €	IN-VB-S 2-50	624.0205.967	848.74 €	1,010.00 €
IN-VB 2-60	624.0206.067	611.76 €	728.00 €	IN-VB-S 2-60	624.0206.967	880.67 €	1,048.00 €
IN-VB 2-70	624.0207.067	631.93 €	752.00 €	IN-VB-S 2-70	624.0207.967	901.68 €	1,073.00 €
IN-VB 2-80	624.0208.067	657.14 €	782.00 €	IN-VB-S 2-80	624.0208.967	955.46 €	1,137.00 €
IN-VB 2-90	624.0209.067	713.45 €	849.00 €	IN-VB-S 2-90	624.0209.967	1,028.57 €	1,224.00 €
IN-VB 2-100	624.0210.067	747.90 €	890.00 €	IN-VB-S 2-100	624.0210.967	1,081.51 €	1,287.00 €
IN-VB 2-110	624.0211.067	775.63 €	923.00 €	IN-VB-S 2-110	624.0211.967	1,126.05 €	1,340.00 €
IN-VB 2-120	624.0212.067	811.76 €	966.00 €	IN-VB-S 2-120	624.0212.967	1,155.46 €	1,375.00 €
IN-VB 2-140	624.0214.067	872.27 €	1,038.00 €	IN-VB-S 2-140	624.0214.967	1,220.17 €	1,452.00 €
IN-VB 2-160	624.0216.067	994.12 €	1,183.00 €	IN-VB-S 2-160	624.0216.967	1,380.67 €	1,643.00 €
IN-VB 2-180	624.0218.067	1,061.34 €	1,263.00 €	IN-VB-S 2-180	624.0218.967	1,479.83 €	1,761.00 €
IN-VB 2-200	624.0220.067	1,128.57 €	1,343.00 €	IN-VB-S 2-200	624.0220.967	1,580.67 €	1,881.00 €
IN-VB 2-220 F	624.0222.067	1,249.58 €	1,487.00 €	IN-VB-S 2-220 F	624.0222.967	1,794.12 €	2,135.00 €
IN-VB 2-240 F	624.0224.067	1,319.33 €	1,570.00 €	IN-VB-S 2-240 F	624.0224.967	1,893.28 €	2,253.00 €
IN-VB 2-260 F	624.0226.067	1,385.71 €	1,649.00 €	IN-VB-S 2-260 F	624.0226.967	1,994.96 €	2,374.00 €
IN-VB 2-280 F	624.0228.067	1,454.62 €	1,731.00 €	IN-VB-S 2-280 F	624.0228.967	2,094.96 €	2,493.00 €
IN-VB 2-300 F	624.0230.067	1,521.85 €	1,811.00 €	IN-VB-S 2-300 F	624.0230.967	2,196.64 €	2,614.00 €

Type	Article no.	Net RRP	Gross RRP	Type	Article no.	Net RRP	Gross RRP
IN-VB 4-20	624.0402.067	530.25 €	631.00 €	IN-VB-S 4-20	624.0402.967	783.19 €	932.00 €
IN-VB 4-30	624.0403.067	555.46 €	661.00 €	IN-VB-S 4-30	624.0403.967	805.88 €	959.00 €
IN-VB 4-40	624.0404.067	613.45 €	730.00 €	IN-VB-S 4-40	624.0404.967	836.13 €	995.00 €
IN-VB 4-50	624.0405.067	657.98 €	783.00 €	IN-VB-S 4-50	624.0405.967	898.32 €	1,069.00 €
IN-VB 4-60	624.0406.067	715.13 €	851.00 €	IN-VB-S 4-60	624.0406.967	977.31 €	1,163.00 €
IN-VB 4-70	624.0407.067	751.26 €	894.00 €	IN-VB-S 4-70	624.0407.967	1,062.18 €	1,264.00 €
IN-VB 4-80	624.0408.067	851.26 €	1,013.00 €	IN-VB-S 4-80	624.0408.967	1,220.17 €	1,452.00 €
IN-VB 4-90	624.0409.067	929.41 €	1,106.00 €	IN-VB-S 4-90	624.0409.967	1,314.29 €	1,564.00 €
IN-VB 4-100	624.0410.067	1,000.00 €	1,190.00 €	IN-VB-S 4-100	624.0410.967	1,410.08 €	1,678.00 €
IN-VB 4-110	624.0411.067	1,068.07 €	1,271.00 €	IN-VB-S 4-110	624.0411.967	1,489.92 €	1,773.00 €
IN-VB 4-120	624.0412.067	1,090.76 €	1,298.00 €	IN-VB-S 4-120	624.0412.967	1,547.06 €	1,841.00 €
IN-VB 4-140	624.0414.067	1,109.24 €	1,320.00 €	IN-VB-S 4-140	624.0414.967	1,602.52 €	1,907.00 €
IN-VB 4-160	624.0416.067	1,287.39 €	1,532.00 €	IN-VB-S 4-160	624.0416.967	1,763.87 €	2,099.00 €
IN-VB 4-180 F	624.0418.067	1,485.71 €	1,768.00 €	IN-VB-S 4-180 F	624.0418.967	1,926.89 €	2,293.00 €
IN-VB 4-200 F	624.0420.067	1,549.58 €	1,844.00 €	IN-VB-S 4-200 F	624.0420.967	2,051.26 €	2,441.00 €
IN-VB 4-220 F	624.0422.067	1,609.24 €	1,915.00 €	IN-VB-S 4-220 F	624.0422.967	2,147.90 €	2,556.00 €
IN-VB 4-240 F	624.0424.067	1,858.82 €	2,212.00 €	IN-VB-S 4-240 F	624.0424.967	2,410.92 €	2,869.00 €
IN-VB 4-260 F	624.0426.067	1,918.49 €	2,283.00 €	IN-VB-S 4-260 F	624.0426.967	2,587.39 €	3,079.00 €

IN-VB

Order information

Type	Article no.	Net RRP	Gross RRP	Type	Article no.	Net RRP	Gross RRP
IN-VB 6-20	624.0602.067	656.30 €	781.00 €	IN-VB-S 6-20	624.0602.967	833.61 €	992.00 €
IN-VB 6-30	624.0603.067	752.94 €	896.00 €	IN-VB-S 6-30	624.0603.967	956.30 €	1,138.00 €
IN-VB 6-40	624.0604.067	835.29 €	994.00 €	IN-VB-S 6-40	624.0604.967	1,063.87 €	1,266.00 €
IN-VB 6-50	624.0605.067	902.52 €	1,074.00 €	IN-VB-S 6-50	624.0605.967	1,158.82 €	1,379.00 €
IN-VB 6-60	624.0606.067	1,043.70 €	1,242.00 €	IN-VB-S 6-60	624.0606.967	1,333.61 €	1,587.00 €
IN-VB 6-70	624.0607.067	1,112.61 €	1,324.00 €	IN-VB-S 6-70	624.0607.967	1,383.19 €	1,646.00 €
IN-VB 6-80	624.0608.067	1,190.76 €	1,417.00 €	IN-VB-S 6-80	624.0608.967	1,484.87 €	1,767.00 €
IN-VB 6-90	624.0609.067	1,257.98 €	1,497.00 €	IN-VB-S 6-90	624.0609.967	1,578.99 €	1,879.00 €
IN-VB 6-100	624.0610.067	1,328.57 €	1,581.00 €	IN-VB-S 6-100	624.0610.967	1,668.07 €	1,985.00 €
IN-VB 6-110	624.0611.067	1,513.45 €	1,801.00 €	IN-VB-S 6-110	624.0611.967	1,881.51 €	2,239.00 €
IN-VB 6-120	624.0612.067	1,579.83 €	1,880.00 €	IN-VB-S 6-120	624.0612.967	1,973.11 €	2,348.00 €
IN-VB 6-140	624.0614.067	1,715.97 €	2,042.00 €	IN-VB-S 6-140	624.0614.967	2,156.30 €	2,566.00 €
IN-VB 6-160	624.0616.067	1,926.89 €	2,293.00 €	IN-VB-S 6-160	624.0616.967	2,415.97 €	2,875.00 €
IN-VB 6-180 F	624.0618.067	2,126.89 €	2,531.00 €	IN-VB-S 6-180 F	624.0618.967	2,730.25 €	3,249.00 €
IN-VB 6-200 F	624.0620.067	2,547.06 €	3,031.00 €	IN-VB-S 6-200 F	624.0620.967	3,209.24 €	3,819.00 €
IN-VB 6-220 F	624.0622.067	2,683.19 €	3,193.00 €	IN-VB-S 6-220 F	624.0622.967	3,389.92 €	4,034.00 €
IN-VB 6-240 F	624.0624.067	2,821.01 €	3,357.00 €	IN-VB-S 6-240 F	624.0624.967	3,573.95 €	4,253.00 €
IN-VB 6-260 F	624.0626.067	2,957.14 €	3,519.00 €	IN-VB-S 6-260 F	624.0626.967	3,756.30 €	4,470.00 €

Type	Article no.	Net RRP	Gross RRP	Type	Article no.	Net RRP	Gross RRP
IN-VB 10-10	624.1001.067	739.50 €	880.00 €	IN-VB-S 10-10	624.1001.967	1,109.24 €	1,320.00 €
IN-VB 10-20	624.1002.067	848.74 €	1,010.00 €	IN-VB-S 10-20	624.1002.967	1,170.59 €	1,393.00 €
IN-VB 10-30	624.1003.067	1,011.76 €	1,204.00 €	IN-VB-S 10-30	624.1003.967	1,245.38 €	1,482.00 €
IN-VB 10-40	624.1004.067	1,075.63 €	1,280.00 €	IN-VB-S 10-40	624.1004.967	1,446.22 €	1,721.00 €
IN-VB 10-50	624.1005.067	1,226.05 €	1,459.00 €	IN-VB-S 10-50	624.1005.967	1,599.16 €	1,903.00 €
IN-VB 10-60	624.1006.067	1,302.52 €	1,550.00 €	IN-VB-S 10-60	624.1006.967	1,692.44 €	2,014.00 €
IN-VB 10-70	624.1007.067	1,474.79 €	1,755.00 €	IN-VB-S 10-70	624.1007.967	1,807.56 €	2,151.00 €
IN-VB 10-80	624.1008.067	1,540.34 €	1,833.00 €	IN-VB-S 10-80	624.1008.967	1,969.75 €	2,344.00 €
IN-VB 10-90	624.1009.067	1,709.24 €	2,034.00 €	IN-VB-S 10-90	624.1009.967	2,222.69 €	2,645.00 €
IN-VB 10-100	624.1010.067	1,785.71 €	2,125.00 €	IN-VB-S 10-100	624.1010.967	2,270.59 €	2,702.00 €
IN-VB 10-110	624.1011.067	1,858.82 €	2,212.00 €	IN-VB-S 10-110	624.1011.967	2,343.70 €	2,789.00 €
IN-VB 10-130	624.1013.067	2,082.35 €	2,478.00 €	IN-VB-S 10-130	624.1013.967	2,478.99 €	2,950.00 €
IN-VB 10-150 F	624.1015.067	2,630.25 €	3,130.00 €	IN-VB-S 10-150 F	624.1015.967	3,209.24 €	3,819.00 €
IN-VB 10-170 F	624.1017.067	2,726.05 €	3,244.00 €	IN-VB-S 10-170 F	624.1017.967	3,318.49 €	3,949.00 €
IN-VB 10-190 F	624.1019.067	3,206.72 €	3,816.00 €	IN-VB-S 10-190 F	624.1019.967	3,927.73 €	4,674.00 €
IN-VB 10-210 F	624.1021.067	3,331.93 €	3,965.00 €	IN-VB-S 10-210 F	624.1021.967	4,154.62 €	4,944.00 €

Type	Article no.	Net RRP	Gross RRP	Type	Article no.	Net RRP	Gross RRP
IN-VB 15-10 F	624.1501.067	885.71 €	1,054.00 €	IN-VB-S 15-10 F	624.1501.967	1,243.70 €	1,480.00 €
IN-VB 15-20 F	624.1502.067	1,133.61 €	1,349.00 €	IN-VB-S 15-20 F	624.1502.967	1,409.24 €	1,677.00 €
IN-VB 15-30 F	624.1503.067	1,173.95 €	1,397.00 €	IN-VB-S 15-30 F	624.1503.967	1,549.58 €	1,844.00 €
IN-VB 15-40 F	624.1504.067	1,476.47 €	1,757.00 €	IN-VB-S 15-40 F	624.1504.967	1,867.23 €	2,222.00 €
IN-VB 15-50 F	624.1505.067	1,891.60 €	2,251.00 €	IN-VB-S 15-50 F	624.1505.967	2,273.95 €	2,706.00 €
IN-VB 15-60 F	624.1506.067	1,966.39 €	2,340.00 €	IN-VB-S 15-60 F	624.1506.967	2,442.02 €	2,906.00 €
IN-VB 15-70 F	624.1507.067	2,276.47 €	2,709.00 €	IN-VB-S 15-70 F	624.1507.967	2,710.08 €	3,225.00 €
IN-VB 15-80 F	624.1508.067	2,381.51 €	2,834.00 €	IN-VB-S 15-80 F	624.1508.967	2,905.88 €	3,458.00 €
IN-VB 15-90 F	624.1509.067	2,987.39 €	3,555.00 €	IN-VB-S 15-90 F	624.1509.967	3,612.61 €	4,299.00 €
IN-VB 15-100 F	624.1510.067	3,083.19 €	3,669.00 €	IN-VB-S 15-100 F	624.1510.967	3,815.13 €	4,540.00 €
IN-VB 15-110 F	624.1511.067	3,180.67 €	3,785.00 €	IN-VB-S 15-110 F	624.1511.967	4,031.09 €	4,797.00 €
IN-VB 15-130 F	624.1513.067	3,739.50 €	4,450.00 €	IN-VB-S 15-130 F	624.1513.967	5,021.85 €	5,976.00 €
IN-VB 15-150 F	624.1515.067	3,773.11 €	4,490.00 €	IN-VB-S 15-150 F	624.1515.967	5,295.80 €	6,302.00 €
IN-VB 15-170 F	624.1517.067	3,868.07 €	4,603.00 €	IN-VB-S 15-170 F	624.1517.967	5,502.52 €	6,548.00 €

IN-VB

Order information

Type	Article no.	Net RRP	Gross RRP	Type	Article no.	Net RRP	Gross RRP
IN-VB 25-10 F	624.2501.067	1,816.81 €	2,162.00 €	IN-VB-S 25-10 F	624.2501.967	2,045.38 €	2,434.00 €
IN-VB 25-20 F	624.2502.067	2,030.25 €	2,416.00 €	IN-VB-S 25-20 F	624.2502.967	2,470.59 €	2,940.00 €
IN-VB 25-30 F	624.2503.067	2,452.10 €	2,918.00 €	IN-VB-S 25-30 F	624.2503.967	3,419.33 €	4,069.00 €
IN-VB 25-40 F	624.2504.067	2,680.67 €	3,190.00 €	IN-VB-S 25-40 F	624.2504.967	3,963.87 €	4,717.00 €
IN-VB 25-50 F	624.2505.067	4,010.08 €	4,772.00 €	IN-VB-S 25-50 F	624.2505.967	5,239.50 €	6,235.00 €
IN-VB 25-60 F	624.2506.067	4,240.34 €	5,046.00 €	IN-VB-S 25-60 F	624.2506.967	5,486.55 €	6,529.00 €
IN-VB 25-70 F	624.2507.067	4,542.02 €	5,405.00 €	IN-VB-S 25-70 F	624.2507.967	6,917.65 €	8,232.00 €
IN-VB 25-80 F	624.2508.067	4,806.72 €	5,720.00 €	IN-VB-S 25-80 F	624.2508.967	6,951.26 €	8,272.00 €
IN-VB 25-90 F	624.2509.067	5,121.01 €	6,094.00 €	IN-VB-S 25-90 F	624.2509.967	6,982.35 €	8,309.00 €
IN-VB 25-100 F	624.2510.067	6,006.72 €	7,148.00 €	IN-VB-S 25-100 F	624.2510.967	7,868.91 €	9,364.00 €
IN-VB 25-110 F	624.2511.067	6,383.19 €	7,596.00 €	IN-VB-S 25-110 F	624.2511.967	8,084.03 €	9,620.00 €
IN-VB 25-120 F	624.2512.067	6,817.65 €	8,113.00 €	IN-VB-S 25-120 F	624.2512.967	9,151.26 €	10,890.00 €

Type	Article no.	Net RRP	Gross RRP	Type	Article no.	Net RRP	Gross RRP
IN-VB 40-10-1 F	624.4001.167	2,036.13 €	2,423.00 €	IN-VB-S 40-10-1 F	624.4001.867	2,757.14 €	3,281.00 €
IN-VB 40-10 F	624.4001.067	2,341.18 €	2,786.00 €	IN-VB-S 40-10 F	624.4001.967	2,958.82 €	3,521.00 €
IN-VB 40-20-2 F	624.4002.267	2,826.05 €	3,363.00 €	IN-VB-S 40-20-2 F	624.4002.767	3,686.55 €	4,387.00 €
IN-VB 40-20 F	624.4002.067	2,984.03 €	3,551.00 €	IN-VB-S 40-20 F	624.4002.967	3,857.14 €	4,590.00 €
IN-VB 40-30-2 F	624.4003.267	3,969.75 €	4,724.00 €	IN-VB-S 40-30-2 F	624.4003.767	5,177.31 €	6,161.00 €
IN-VB 40-30 F	624.4003.067	4,247.06 €	5,054.00 €	IN-VB-S 40-30 F	624.4003.967	5,386.55 €	6,410.00 €
IN-VB 40-40-2 F	624.4004.267	4,515.97 €	5,374.00 €	IN-VB-S 40-40-2 F	624.4004.767	5,719.33 €	6,806.00 €
IN-VB 40-40 F	624.4004.067	4,715.13 €	5,611.00 €	IN-VB-S 40-40 F	624.4004.967	6,500.00 €	7,735.00 €
IN-VB 40-50-2 F	624.4005.267	5,278.15 €	6,281.00 €	IN-VB-S 40-50-2 F	624.4005.767	6,931.93 €	8,249.00 €
IN-VB 40-50 F	624.4005.067	6,033.61 €	7,180.00 €	IN-VB-S 40-50 F	624.4005.967	7,793.28 €	9,274.00 €
IN-VB 40-60-2 F	624.4006.267	6,132.77 €	7,298.00 €	IN-VB-S 40-60-2 F	624.4006.767	8,025.21 €	9,550.00 €
IN-VB 40-60 F	624.4006.067	6,227.73 €	7,411.00 €	IN-VB-S 40-60 F	624.4006.967	8,733.61 €	10,393.00 €
IN-VB 40-70-2 F	624.4007.267	6,331.93 €	7,535.00 €	IN-VB-S 40-70-2 F	624.4007.767	9,000.84 €	10,711.00 €
IN-VB 40-70 F	624.4007.067	7,317.65 €	8,708.00 €	IN-VB-S 40-70 F	624.4007.967	10,047.90 €	11,957.00 €
IN-VB 40-80-2 F	624.4008.267	7,444.54 €	8,859.00 €	IN-VB-S 40-80-2 F	624.4008.767	10,412.61 €	12,391.00 €
IN-VB 40-80 F	624.4008.067	7,450.42 €	8,866.00 €	IN-VB-S 40-80 F	624.4008.967	10,417.65 €	12,397.00 €
IN-VB 40-90-2 F	624.4009.267	7,540.34 €	8,973.00 €	IN-VB-S 40-90-2 F	624.4009.767	10,643.70 €	12,666.00 €
IN-VB 40-90 F	624.4009.067	9,910.08 €	11,793.00 €	IN-VB-S 40-90 F	624.4009.967	11,330.25 €	13,483.00 €
IN-VB 40-100-2 F	624.4010.267	10,036.97 €	11,944.00 €	IN-VB-S 40-100-2 F	624.4010.767	11,569.75 €	13,768.00 €
IN-VB 40-100 F	624.4010.067	10,405.88 €	12,383.00 €	IN-VB-S 40-100 F	624.4010.967	11,570.59 €	13,769.00 €

Type	Article no.	Net RRP	Gross RRP	Type	Article no.	Net RRP	Gross RRP
IN-VB 60-10-1 F	624.6001.167	2,510.92 €	2,988.00 €	IN-VB-S 60-10-1 F	624.6001.867	3,059.66 €	3,641.00 €
IN-VB 60-10 F	624.6001.067	2,960.50 €	3,523.00 €	IN-VB-S 60-10 F	624.6001.967	3,514.29 €	4,182.00 €
IN-VB 60-20-2 F	624.6002.267	3,488.24 €	4,151.00 €	IN-VB-S 60-20-2 F	624.6002.767	4,470.59 €	5,320.00 €
IN-VB 60-20 F	624.6002.067	4,343.70 €	5,169.00 €	IN-VB-S 60-20 F	624.6002.967	5,447.90 €	6,483.00 €
IN-VB 60-30-2 F	624.6003.267	4,931.93 €	5,869.00 €	IN-VB-S 60-30-2 F	624.6003.767	6,146.22 €	7,314.00 €
IN-VB 60-30 F	624.6003.067	5,542.02 €	6,595.00 €	IN-VB-S 60-30 F	624.6003.967	6,882.35 €	8,190.00 €
IN-VB 60-40-2 F	624.6004.267	5,968.07 €	7,102.00 €	IN-VB-S 60-40-2 F	624.6004.767	7,389.08 €	8,793.00 €
IN-VB 60-40 F	624.6004.067	6,460.50 €	7,688.00 €	IN-VB-S 60-40 F	624.6004.967	8,009.24 €	9,531.00 €
IN-VB 60-50-2 F	624.6005.267	6,856.30 €	8,159.00 €	IN-VB-S 60-50-2 F	624.6005.767	8,484.03 €	10,096.00 €
IN-VB 60-50 F	624.6005.067	7,219.33 €	8,591.00 €	IN-VB-S 60-50 F	624.6005.967	8,928.57 €	10,625.00 €
IN-VB 60-60-2 F	624.6006.267	7,923.53 €	9,429.00 €	IN-VB-S 60-60-2 F	624.6006.767	9,815.97 €	11,681.00 €
IN-VB 60-60 F	624.6006.067	8,295.80 €	9,872.00 €	IN-VB-S 60-60 F	624.6006.967	10,263.87 €	12,214.00 €
IN-VB 60-70-2 F	624.6007.267	9,263.87 €	11,024.00 €	IN-VB-S 60-70-2 F	624.6007.767	11,426.05 €	13,597.00 €
IN-VB 60-70 F	624.6007.067	9,332.77 €	11,106.00 €	IN-VB-S 60-70 F	624.6007.967	11,543.70 €	13,737.00 €
IN-VB 60-80-2 F	624.6008.267	10,701.68 €	12,735.00 €	IN-VB-S 60-80-2 F	624.6008.767	13,165.55 €	15,667.00 €
IN-VB 60-80 F	624.6008.067	10,710.08 €	12,745.00 €	IN-VB-S 60-80 F	624.6008.967	13,185.71 €	15,691.00 €
IN-VB 60-90-2 F	624.6009.267	12,647.06 €	15,050.00 €	IN-VB-S 60-90-2 F	624.6009.767	15,499.16 €	18,444.00 €

IN-VB

Order information

Type	Article no.	Net RRP	Gross RRP	Type	Article no.	Net RRP	Gross RRP
IN-VB 85-10-1 F	623.8501.167	3,273.11 €	3,895.00 €	IN-VB-S 85-10-1 F	623.8501.867	3,489.92 €	4,153.00 €
IN-VB 85-10 F	623.8501.067	4,322.69 €	5,144.00 €	IN-VB-S 85-10 F	623.8501.967	4,607.56 €	5,483.00 €
IN-VB 85-20-2 F	623.8502.267	5,317.65 €	6,328.00 €	IN-VB-S 85-20-2 F	623.8502.767	5,670.59 €	6,748.00 €
IN-VB 85-20-1 F	623.8502.167	6,057.98 €	7,209.00 €	IN-VB-S 85-20-1 F	623.8502.867	6,458.82 €	7,686.00 €
IN-VB 85-20 F	623.8502.067	6,703.36 €	7,977.00 €	IN-VB-S 85-20 F	623.8502.967	7,147.90 €	8,506.00 €
IN-VB 85-30-2 F	623.8503.267	7,331.93 €	8,725.00 €	IN-VB-S 85-30-2 F	623.8503.767	7,816.81 €	9,302.00 €
IN-VB 85-30-1 F	623.8503.167	7,822.69 €	9,309.00 €	IN-VB-S 85-30-1 F	623.8503.867	8,336.97 €	9,921.00 €
IN-VB 85-30 F	623.8503.067	8,278.99 €	9,852.00 €	IN-VB-S 85-30 F	623.8503.967	8,826.05 €	10,503.00 €
IN-VB 85-40-2 F	623.8504.267	8,757.14 €	10,421.00 €	IN-VB-S 85-40-2 F	623.8504.767	9,334.45 €	11,108.00 €
IN-VB 85-40-1 F	623.8504.167	9,184.03 €	10,929.00 €	IN-VB-S 85-40-1 F	623.8504.867	9,791.60 €	11,652.00 €
IN-VB 85-40 F	623.8504.067	9,621.01 €	11,449.00 €	IN-VB-S 85-40 F	623.8504.967	10,258.82 €	12,208.00 €
IN-VB 85-50-2 F	623.8505.267	10,136.13 €	12,062.00 €	IN-VB-S 85-50-2 F	623.8505.767	10,804.20 €	12,857.00 €
IN-VB 85-50-1 F	623.8505.167	10,638.66 €	12,660.00 €	IN-VB-S 85-50-1 F	623.8505.867	11,342.86 €	13,498.00 €
IN-VB 85-50 F	623.8505.067	11,189.08 €	13,315.00 €	IN-VB-S 85-50 F	623.8505.967	11,929.41 €	14,196.00 €
IN-VB 85-60-2 F	623.8506.267	11,869.75 €	14,125.00 €	IN-VB-S 85-60-2 F	623.8506.767	12,651.26 €	15,055.00 €
IN-VB 85-60-1 F	623.8506.167	12,551.26 €	14,936.00 €	IN-VB-S 85-60-1 F	623.8506.867	13,378.99 €	15,921.00 €
IN-VB 85-60 F	623.8506.067	13,294.12 €	15,820.00 €	IN-VB-S 85-60 F	623.8506.967	14,173.11 €	16,866.00 €

Type	Article no.	Net RRP	Gross RRP	Type	Article no.	Net RRP	Gross RRP
IN-VB 125-10 F	624.1251.067	6,326.05 €	7,528.00 €	IN-VB-S 125-10 F	624.1251.967	6,742.02 €	8,023.00 €
IN-VB 125-20-2 F	624.1252.267	7,511.76 €	8,939.00 €	IN-VB-S 125-20-2 F	624.1252.767	7,895.80 €	9,396.00 €
IN-VB 125-20-1 F	624.1252.167	7,830.25 €	9,318.00 €	IN-VB-S 125-20-1 F	624.1252.867	8,205.88 €	9,765.00 €
IN-VB 125-20 F	624.1252.067	8,296.64 €	9,873.00 €	IN-VB-S 125-20 F	624.1252.967	8,657.98 €	10,303.00 €
IN-VB 125-30-2 F	624.1253.267	9,096.64 €	10,825.00 €	IN-VB-S 125-30-2 F	624.1253.767	9,440.34 €	11,234.00 €
IN-VB 125-30-1 F	624.1253.167	9,245.38 €	11,002.00 €	IN-VB-S 125-30-1 F	624.1253.867	9,582.35 €	11,403.00 €
IN-VB 125-30 F	624.1253.067	9,328.57 €	11,101.00 €	IN-VB-S 125-30 F	624.1253.967	9,690.76 €	11,532.00 €
IN-VB 125-40-2 F	624.1254.267	10,889.92 €	12,959.00 €	IN-VB-S 125-40-2 F	624.1254.767	11,184.03 €	13,309.00 €

Supplements

Round flanges instead of oval flanges

Type	Article no.	Connections	Net RRP	Gross RRP
IN-VB 2	623.0200.076	DN 25	61.01 €	71.30 €
IN-VB-S 2	623.0200.976	DN 25	72.18 €	84.40 €
IN-VB 4	623.0400.076	DN 32	63.19 €	73.90 €
IN-VB-S 4	623.0400.976	DN 32	74.45 €	87.00 €
IN-VB 6	623.0400.076	DN 32	63.19 €	73.90 €
IN-VB-S 6	623.0400.976	DN 32	74.45 €	87.00 €
IN-VB 10	623.1000.076	DN 40	66.64 €	79.30 €
IN-VB-S 10	623.1000.976	DN 40	85.71 €	102.00 €

Set of stainless steel, oval counter flanges, incl. screws and seals

Type	Article no.	Connections	Net RRP	Gross RRP
IN-VB 2	623.0200.077	1	62.18 €	74.00 €
IN-VB 4	623.0400.077	1 ¼	89.08 €	106.00 €
IN-VB 6	623.0400.077	1 ¼	89.08 €	106.00 €
IN-VB 10	623.1000.077	1 ½	106.72 €	127.00 €
IN-VB 10	623.1000.078	2	128.57 €	153.00 €

IN-VB

Set of stainless steel, round counter flanges, incl. screws and seals

Type	Article no.	Max. rated pressure	Threaded connections	Pump connections	Net RRP	Gross RRP
IN-VB 2 F	623.0200.075	PN 25	1	DN 25	168.07 €	200.00 €
IN-VB 4 F	623.0400.075	PN 25	1 ¼	DN 32	212.61 €	253.00 €
IN-VB 6 F	623.0400.075	PN 25	1 ¼	DN 32	212.61 €	253.00 €
IN-VB 10 F	623.1000.075	PN 25	1 ½	DN 40	233.61 €	278.00 €
IN-VB 15 F	623.1800.075	PN 25	2	DN 50	307.56 €	366.00 €
IN-VB 25 F	623.3200.075	PN 25	2 ½	DN 65	352.94 €	420.00 €
IN-VB 40 F	623.4500.075	PN 25	3	DN 80	400.00 €	476.00 €
IN-VB 60/85 F	623.6500.074	PN 16	4	DN 100	357.98 €	426.00 €
IN-VB 60/85 F	623.6500.075	PN 25	4	DN 100	475.63 €	566.00 €
IN-VB 125 F	623.1250.076	PN 16	5	DN 125	641.18 €	763.00 €
IN-VB 125 F	623.1250.075	PN 25	5	DN 125	1,257.98 €	1,497.00€

IN-VB-L with low NPSH impeller

Type	Article no.	Net RRP	Gross RRP
IN-VB-L 2 - 6	623.0200.084	54.29 €	64.60 €
IN-VB-L 10 - 15	623.1000.084	64.87 €	77.20 €
IN-VB-L 25 - 85 F	-	-	-
IN-VB-L 125 F	-	-	

IN-VB-C with cast iron housing

Type	Article no.	Net RRP	Gross RRP
IN-VB-C 2 - 6	623.0200.094	104.20 €	124.00 €
IN-VB-C 10 - 15	623.1000.094	104.20 €	124.00 €
IN-VB-C 25 - 85 F	623.3200.094	156.30 €	186.00 €
IN-VB-C 125 F	623.1250.094	156.30 €	186.00 €

Special mechanical seals

Easy Access (Standard IN-VB 25 - 85)

Type	Article no.	Net RRP	Gross RRP
IN-VB 2 - 6	623.0200.095	61.09 €	72.70 €
IN-VB 10 - 15	623.1000.095	71.26 €	84.80 €

Cartridge (Standard IN-VB 125)

Type	Article no.	Net RRP	Gross RRP
IN-VB 2 - 6	623.0200.096	116.81 €	139.00 €
IN-VB 10 - 15	623.1000.096	126.89 €	151.00 €
IN-VB 25 - 85	623.3200.096	152.94 €	182.00 €

Carbon/SiC/EPDM, code 11 (Standard IN-VB, PN 10)

Type	Article no.	Size Ø	Pressure	Net RRP	Gross RRP
IN-VB 2 - 6	623.0200.070	12	PN 10	58.82 €	70.00 €
IN-VB 10 - 15	623.1000.070	16	PN 10	66.64 €	79.30 €
IN-VB 25 - 85 F	623.3200.070	22	PN 10	144.54 €	172.00 €
IN-VB 125 F	623.1250.070	28	PN 10	158.82 €	189.00 €

Carbon/SiC/Viton, code 12 (Standard IN-VB-S, PN 10)

Type	Article no.	Size Ø	Pressure	Net RRP	Gross RRP
IN-VB 2 - 6	623.0200.071	12	PN 10	58.82 €	70.00 €
IN-VB 10 - 15	623.1000.071	16	PN 10	66.64 €	79.30 €
IN-VB 25 - 85 F	623.3200.071	22	PN 10	144.54 €	172.00 €
IN-VB 125 F	623.1250.071	28	PN 10	158.82 €	189.00 €

IN-VB

SiC/carbon/EPDM, WRAS, code 13

Type	Article no.	Size Ø	Pressure	Net RRP	Gross RRP
IN-VB 2 - 6	623.0200.087	12	PN 25	88.82 €	79.90 €
IN-VB 10 - 15	623.1000.087	16	PN 25	91.60 €	109.00 €
IN-VB 25 - 85 F	623.3200.087	22	PN 25	172.27 €	205.00 €
IN-VB 125 F	623.1250.087	28	PN 25	188.24 €	224.00 €

SiC/carbon/Viton, code 14 (Standard IN-VB-S, PN 25)

Type	Article no.	Size Ø	Pressure	Net RRP	Gross RRP
IN-VB 2 - 6	623.0200.068	12	PN 25	58.82 €	70.00 €
IN-VB 10 - 15	623.1000.068	16	PN 25	66.64 €	79.30 €
IN-VB 25 - 85 F	623.3200.068	22	PN 25	144.54 €	172.00 €
IN-VB 125 F	623.1250.068	28	PN 25	158.82 €	189.00 €

TuC/TuC/HNBR, code 15

Type	Article no.	Size Ø	Pressure	Net RRP	Gross RRP
IN-VB 2 - 6	623.0200.073	12	PN 25	85.71 €	102.00 €
IN-VB 10 - 15	623.1000.073	16	PN 25	93.28 €	111.00 €
IN-VB 25 - 85 F	623.3200.073	22	PN 25	175.63 €	209.00 €
IN-VB 125 F	623.1250.073	28	PN 25	191.60 €	228.00 €

TuC/TuC/Viton, code 16

Type	Article no.	Size Ø	Pressure	Net RRP	Gross RRP
IN-VB 2 - 6	623.0200.074	12	PN 25	85.71 €	102.00 €
IN-VB 10 - 15	623.1000.074	16	PN 25	93.28 €	111.00 €
IN-VB 25 - 85 F	623.3200.074	22	PN 25	175.63 €	209.00 €
IN-VB 125 F	623.1250.074	28	PN 25	191.60 €	228.00 €

TuC/carbon/EPDM, code 18

Type	Article no.	Size Ø	Pressure	Net RRP	Gross RRP
IN-VB 2 - 6	623.0200.085	12	PN 25	85.71 €	102.00 €
IN-VB 10 - 15	623.1000.085	16	PN 25	93.28 €	111.00 €
IN-VB 25 - 85 F	623.3200.085	22	PN 25	175.63 €	209.00 €
IN-VB 125 F	623.1250.085	28	PN 25	191.60 €	228.00 €

SiC/carbon/EPDM, code 20

Type	Article no.	Size Ø	Pressure	Net RRP	Gross RRP
IN-VB 2 - 6	623.0200.086	12	PN 40	1,355.46 €	1,613.00 €
IN-VB 10 - 15	623.1000.086	16	PN 40	1,463.03 €	1,741.00 €
IN-VB 25 - 85 F	623.3200.086	22	PN 40	1,569.75 €	1,868.00 €
IN-VB 125 F	623.1250.086	28	PN 40	1,677.31 €	1,996.00 €

SiC/carbon/Viton, code 21

Type	Article no.	Size Ø	Pressure	Net RRP	Gross RRP
IN-VB 2 - 6	623.0200.088	12	PN 40	1,355.46 €	1,613.00 €
IN-VB 10 - 15	623.1000.088	16	PN 40	1,463.03 €	1,741.00 €
IN-VB 25 - 85 F	623.3200.088	22	PN 40	1,569.75 €	1,868.00 €
IN-VB 125 F	623.1250.088	28	PN 40	1,677.31 €	1,996.00 €

IN-VB

SiC/carbon/HNBR, code 22

Type	Article no.	Size Ø	Pressure	Net RRP	Gross RRP
IN-VB 2 - 6	623.0200.089	12	PN 40	1,355.46 €	1,613.00 €
IN-VB 10 - 15	623.1000.089	16	PN 40	1,463.03 €	1,741.00 €
IN-VB 25 - 85 F	623.3200.089	22	PN 40	1,569.75 €	1,868.00 €
IN-VB 125 F	623.1250.089	28	PN 40	1,677.31 €	1,996.00 €

SiC/carbon/EPDM, code 23 (Standard IN-VB, PN 25)

Type	Article no.	Size Ø	Pressure	Net RRP	Gross RRP
IN-VB 2 - 6	623.0200.067	12	PN 25	58.82 €	70.00 €
IN-VB 10 - 15	623.1000.067	16	PN 25	66.64 €	79.30 €
IN-VB 25 - 85 F	623.3200.067	22	PN 25	144.54 €	172.00 €
IN-VB 125 F	623.1250.067	28	PN 25	158.82 €	189.00 €

SiC/SiC/Viton, code 24

Type	Article no.	Size Ø	Pressure	Net RRP	Gross RRP
IN-VB 2 - 6	623.0200.091	12	PN 10	58.82 €	70.00 €
IN-VB 10 - 15	623.3100.091	16	PN 10	66.64 €	79.30 €
IN-VB 25 - 85 F	623.3200.091	22	PN 10	144.54 €	172.00 €
IN-VB 125 F	623.3125.091	28	PN 10	158.82 €	189.00 €

SiC/SiC/HNBR, code 28

Type	Article no.	Size Ø	Pressure	Net RRP	Gross RRP
IN-VB 2 - 6	623.0200.092	12	PN 10	58.82 €	70.00 €
IN-VB 10 - 15	623.1000.092	16	PN 10	66.64 €	79.30 €
IN-VB 25 - 85 F	623.3200.092	22	PN 10	144.54 €	172.00 €
IN-VB 125 F	623.1250.092	28	PN 10	158.82 €	189.00 €

SiC/SiC/EPDM, code 29

Type	Article no.	Size Ø	Pressure	Net RRP	Gross RRP
IN-VB 2 - 6	623.0200.093	12	PN 10	58.82 €	70.00 €
IN-VB 10 - 15	623.1000.093	16	PN 10	66.64 €	79.30 €
IN-VB 25 - 85 F	623.3200.093	22	PN 10	144.54 €	172.00 €
IN-VB 125 F	623.1250.093	28	PN 10	158.82 €	189.00 €

Enhanced motor performance 50/60 Hz

From kW to kW	Article no.	Net RRP	Gross RRP
0.37 - 0.55	629.9999.970	54.20 €	64.50 €
0.55 - 0.75	629.9999.971	81.76 €	97.30 €
0.75 - 1.10	629.9999.972	89.92 €	107.00 €
1.10 - 1.50	629.9999.973	94.96 €	113.00 €
1.50 - 2.20	629.9999.974	117.65 €	140.00 €
2.20 - 3.00	629.9999.975	144.54 €	172.00 €
3.00 - 4.00	629.9999.976	211.76 €	252.00 €
4.00 - 5.50	629.9999.977	237.82 €	283.00 €
5.50 - 7.50	629.9999.978	321.01 €	382.00 €
7.50 - 11.00	629.9999.979	751.26 €	894.00 €
11.00 - 15.00	629.9999.980	775.63 €	923.00 €
15.00 - 18.50	629.9999.981	844.54 €	1,005.00 €
18.50 - 22.00	629.9999.982	899.16 €	1,070.00 €
PTC resistor: 0.37 - 2.20	629.9999.995	142.86 €	170.00 €

IN-VB 2

Dimensions

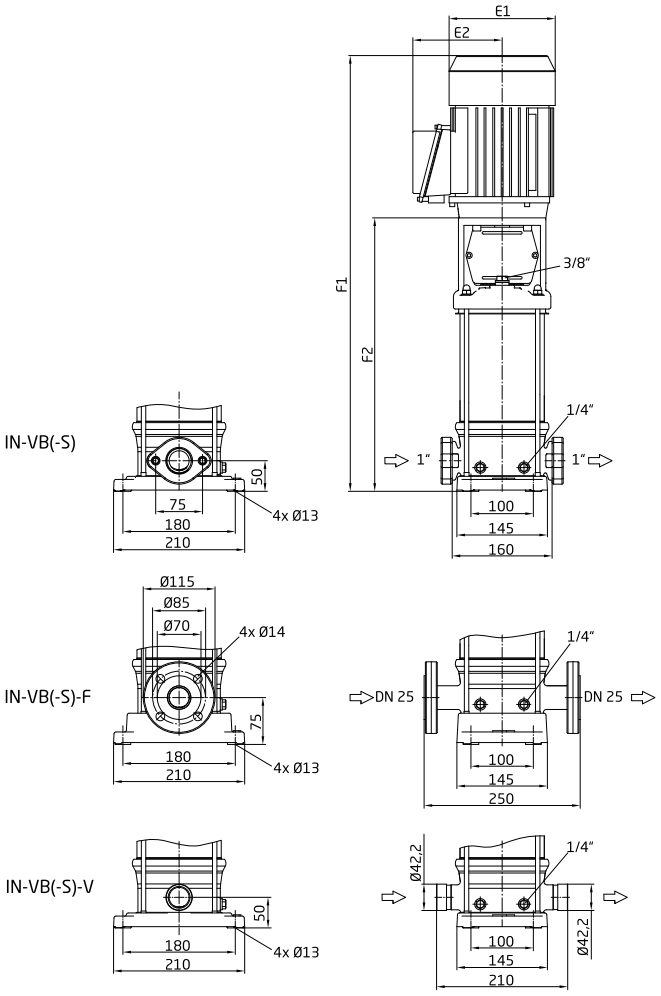

Type	Universal		IN-VB(-S/-S-V) *)		IN-VB(-S)... F *)	
	E1	E2	F1	F2	F1	F2
IN-VB 2-20	134	107	478	259	503	284
IN-VB 2-30	134	107	499	280	524	305
IN-VB 2-40	134	107	521	302	546	327
IN-VB 2-50	134	107	542	323	567	348
IN-VB 2-60	134	107	588	345	613	370
IN-VB 2-70	134	107	609	366	634	391
IN-VB 2-80	134	107	641	398	666	423
IN-VB 2-90	150	115	653	419	678	444
IN-VB 2-100	150	115	675	441	700	466
IN-VB 2-110	150	115	726	462	751	487
IN-VB 2-120	150	115	748	484	773	509
IN-VB 2-140	150	115	791	527	816	552
IN-VB 2-160	185	139	861	580	886	605
IN-VB 2-180	185	139	904	623	929	648
IN-VB 2-200	185	139	947	666	972	691
IN-VB 2-220 F	185	139	-	-	1040	734
IN-VB 2-240 F	185	139	-	-	1083	777
IN-VB 2-260 F	185	139	-	-	1126	820
IN-VB 2-280 F	185	139	-	-	1169	863
IN-VB 2-300 F	185	139	-	-	1212	906

IN-VB 4

Dimensions

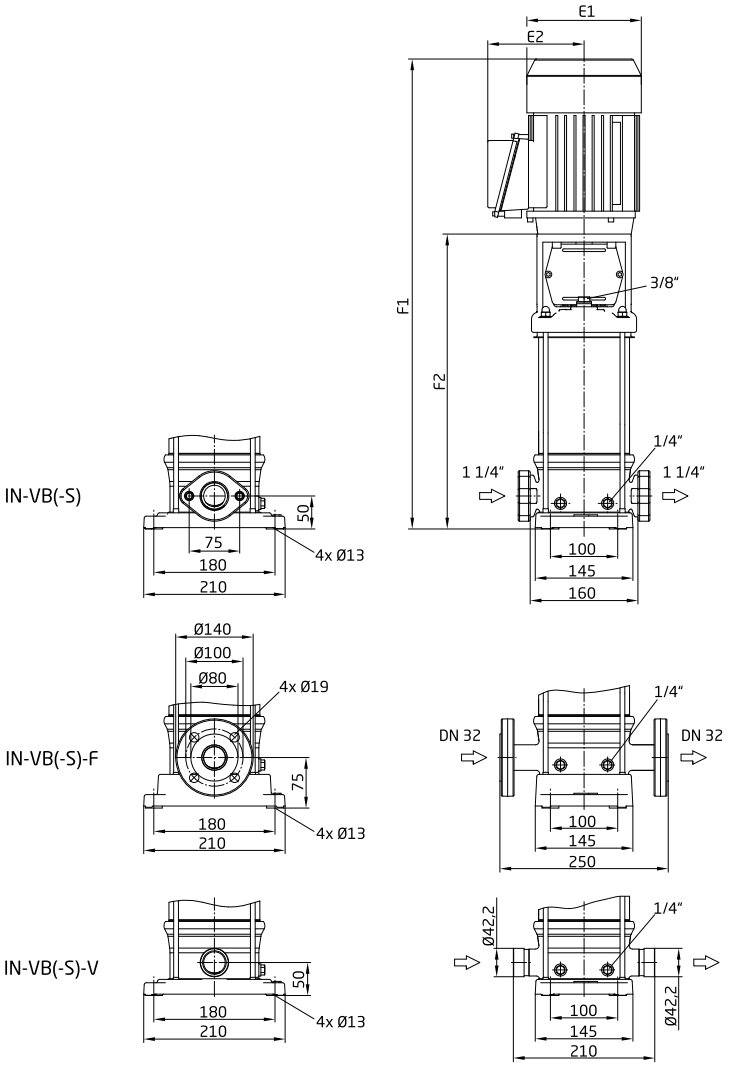

Type	Universal		IN-VB(-S/-S-V) *)		IN-VB(-S)... F *)	
	E1	E2	F1	F2	F1	F2
IN-VB 4-20	134	107	478	259	503	284
IN-VB 4-30	134	107	523	280	548	305
IN-VB 4-40	134	107	545	302	570	327
IN-VB 4-50	150	115	567	333	592	358
IN-VB 4-60	150	115	619	355	644	380
IN-VB 4-70	150	115	640	376	665	401
IN-VB 4-80	185	139	689	408	714	433
IN-VB 4-90	185	139	710	429	735	454
IN-VB 4-100	185	139	732	451	757	476
IN-VB 4-110	185	139	778	472	803	497
IN-VB 4-120	185	139	800	494	825	519
IN-VB 4-140	185	139	843	537	868	562
IN-VB 4-160	199	150	907	590	932	615
IN-VB 4-180 F	199	150	-	-	975	658
IN-VB 4-200 F	199	150	-	-	1018	701
IN-VB 4-220 F	241	165	-	-	1100	744
IN-VB 4-240 F	241	165	-	-	1143	787
IN-VB 4-260 F	241	165	-	-	1186	830

IN-VB 6

Dimensions

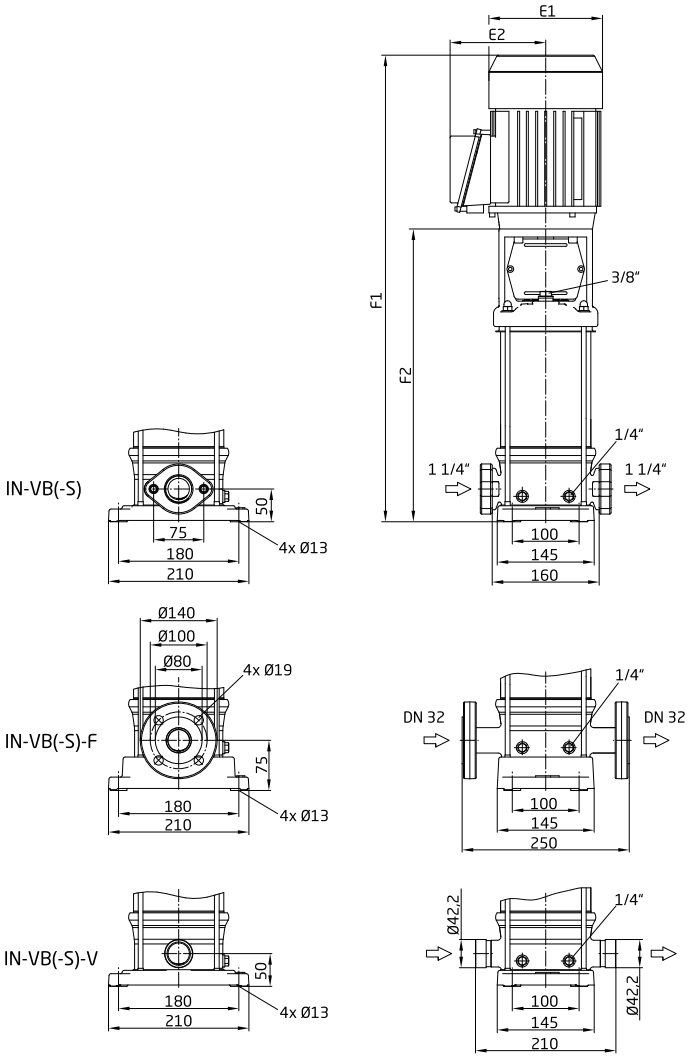

Type	Universal		IN-VB(-S/-S-V) *)		IN-VB(-S)... F *)	
	E1	E2	F1	F2	F1	F2
IN-VB 6-20	134	107	485	266	510	291
IN-VB 6-30	150	115	535	301	560	326
IN-VB 6-40	150	115	590	326	615	351
IN-VB 6-50	150	115	615	351	640	376
IN-VB 6-60	185	139	667	386	692	411
IN-VB 6-70	185	139	692	411	717	436
IN-VB 6-80	185	139	742	436	767	461
IN-VB 6-90	185	139	767	461	792	486
IN-VB 6-100	185	139	792	486	817	511
IN-VB 6-110	199	150	838	521	863	546
IN-VB 6-120	199	150	863	546	888	571
IN-VB 6-140	199	150	913	596	938	621
IN-VB 6-160	241	165	1002	646	1027	671
IN-VB 6-180 F	241	165	-	-	1077	721
IN-VB 6-200 F	288	197	-	-	1279	847
IN-VB 6-220 F	288	197	-	-	1329	897
IN-VB 6-240 F	288	197	-	-	1379	947
IN-VB 6-260 F	288	197	-	-	1429	997

IN-VB 10

Dimensions

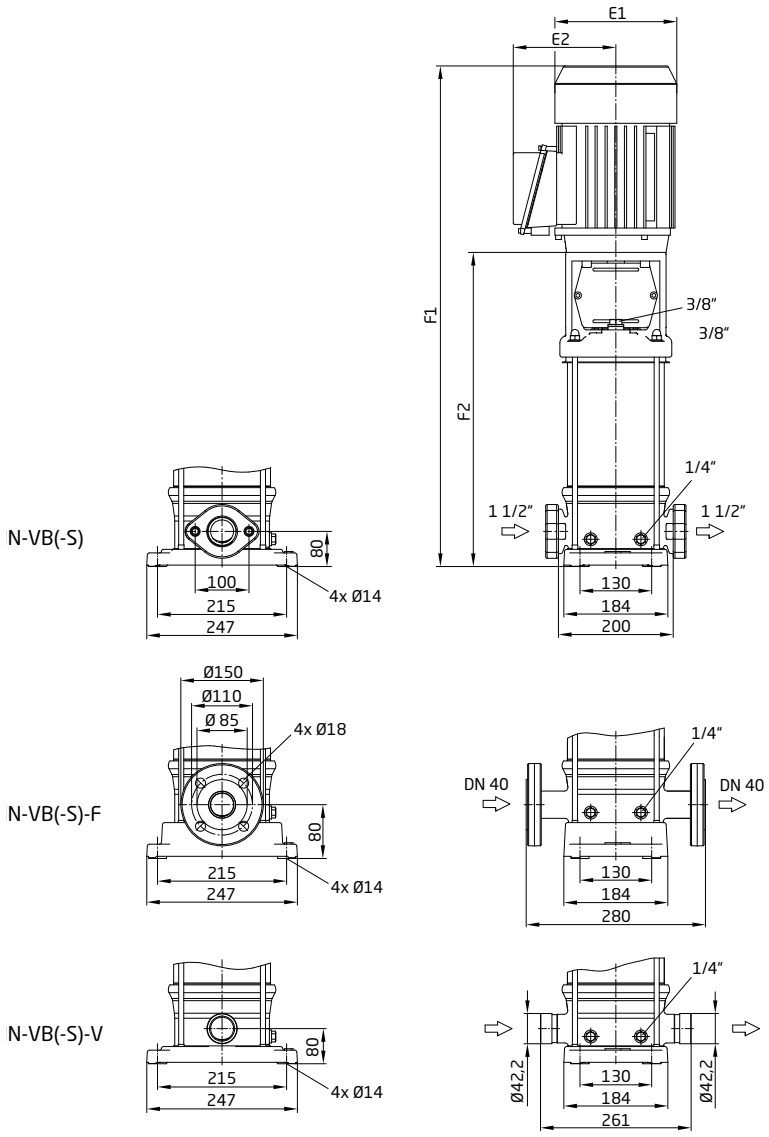

Type	Universal		IN-VB(-S/-S-V) *)		IN-VB(-S)... F *)	
	E1	E2	F1	F2	F1	F2
IN-VB 10-10	150	115	580	346	580	346
IN-VB 10-20	150	115	580	346	580	346
IN-VB 10-30	150	115	636	372	636	372
IN-VB 10-40	185	139	690	409	690	409
IN-VB 10-50	185	139	741	435	741	435
IN-VB 10-60	185	139	768	462	768	462
IN-VB 10-70	199	150	815	498	815	498
IN-VB 10-80	199	150	842	525	842	525
IN-VB 10-90	241	165	907	551	907	551
IN-VB 10-100	241	165	934	578	934	578
IN-VB 10-110	241	165	960	604	960	604
IN-VB 10-130	288	197	1169	737	1169	737
IN-VB 10-150 F	288	197	-	-	1222	790
IN-VB 10-170 F	288	197	-	-	1275	843
IN-VB 10-190 F	288	197	-	-	1328	896
IN-VB 10-210 F	288	197	-	-	1381	949

IN-VB 15

Dimensions

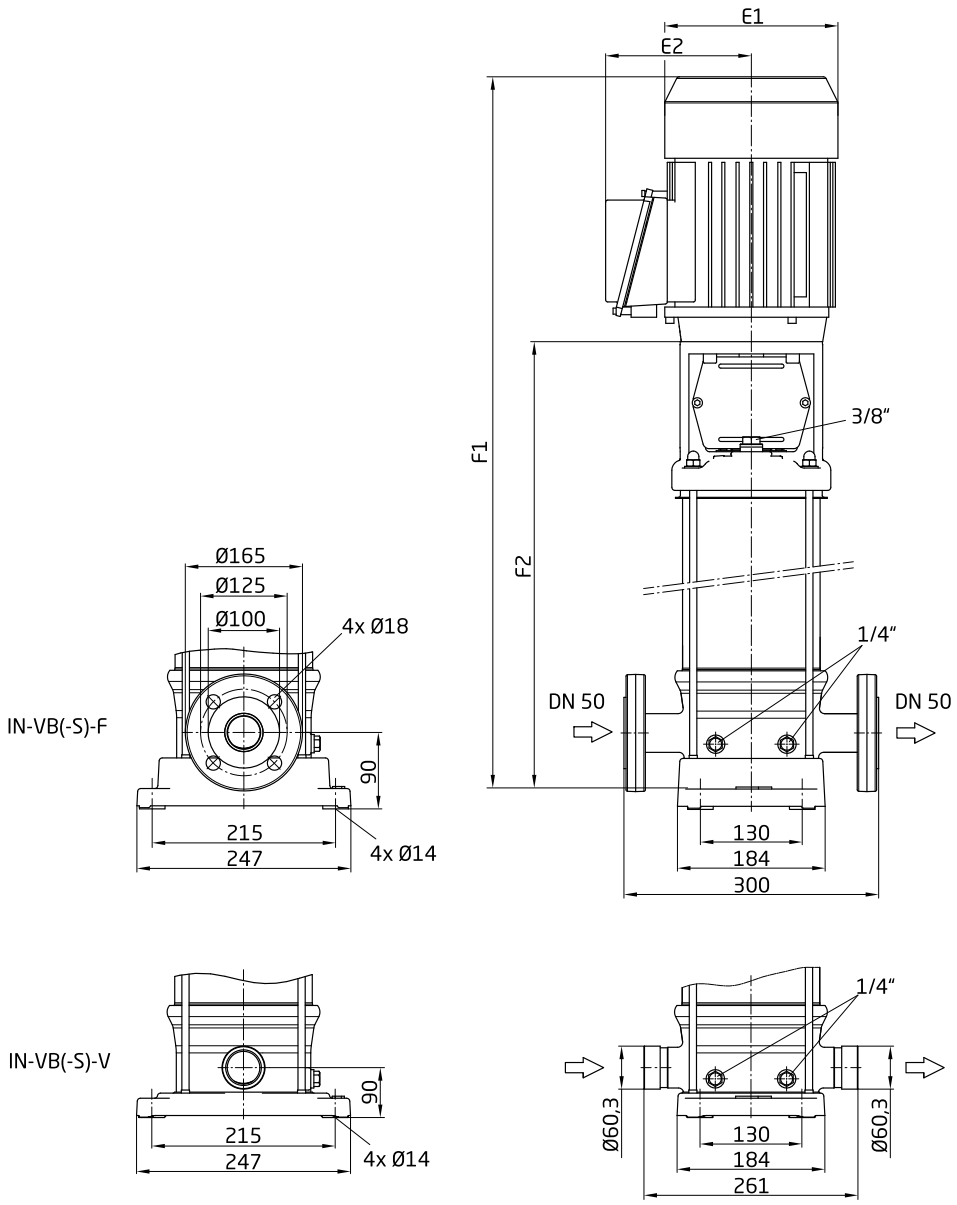

Type	Universal		IN-VB(-S/-S-V) *)		IN-VB(-S)... F *)	
	E1	E2	F1	F2	F1	F2
IN-VB 15-10	150	115	620	356	620	356
IN-VB 15-20	185	139	672	366	672	366
IN-VB 15-30	199	150	719	402	719	402
IN-VB 15-40	241	165	785	429	785	429
IN-VB 15-50	288	197	967	535	967	535
IN-VB 15-60	288	197	993	561	993	561
IN-VB 15-70	288	197	1020	588	1020	588
IN-VB 15-80	288	197	1046	614	1046	614
IN-VB 15-90	340	223	1204	671	1204	671
IN-VB 15-100	340	223	1230	697	1230	697
IN-VB 15-110	340	223	1257	724	1257	724
IN-VB 15-130	340	223	1310	777	1310	777
IN-VB 15-150	340	223	1363	830	1363	830
IN-VB 15-170	340	223	1416	883	1416	883

IN-VB 25

Dimensions

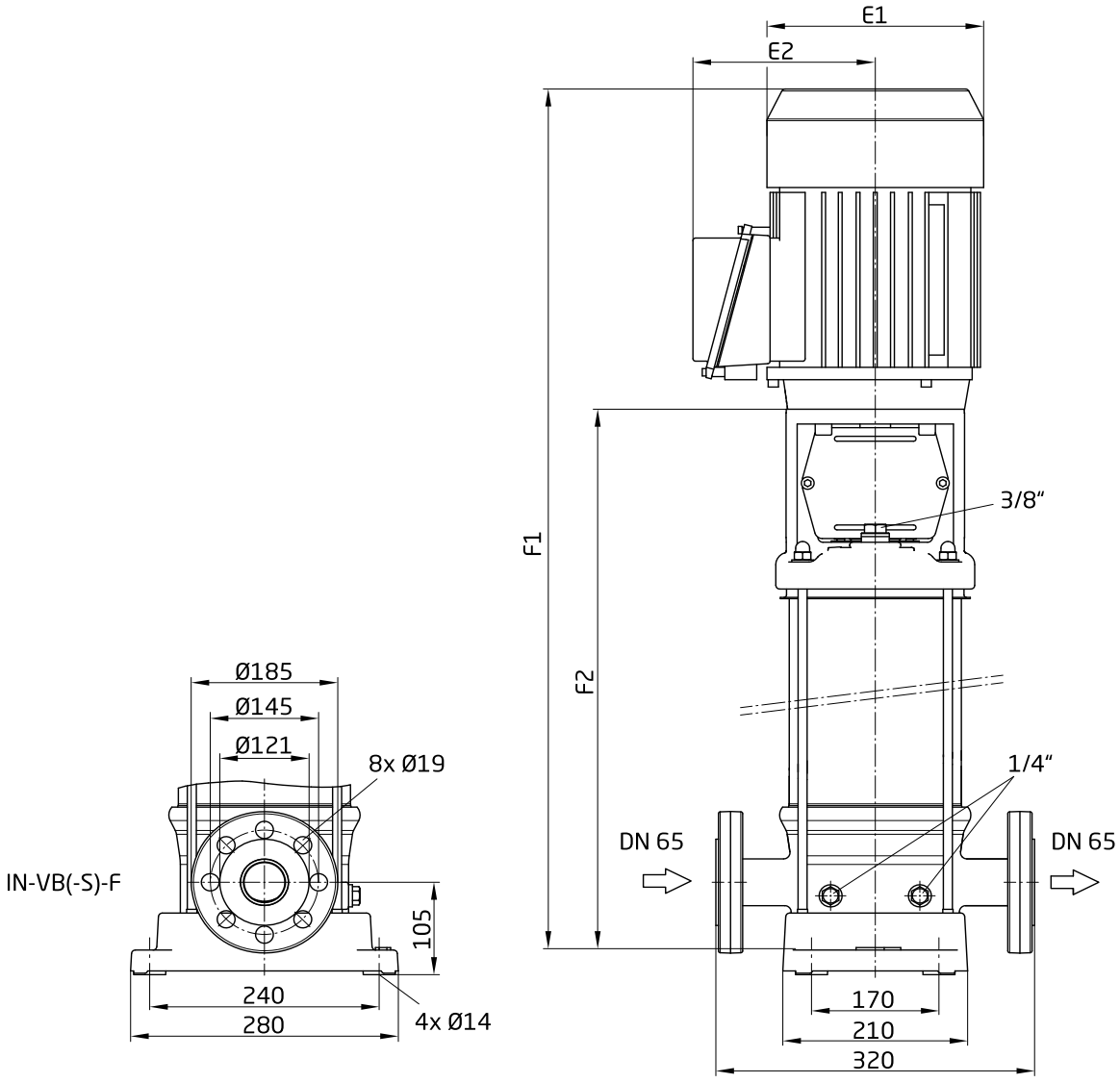

Type	Universal		IN-VB(-S)... F *)	
	E1	E2	F1	F2
IN-VB 25-10	185	139	714	408
IN-VB 25-20	241	165	834	478
IN-VB 25-30	288	197	1066	634
IN-VB 25-40	288	197	1131	699
IN-VB 25-50	340	223	1327	794
IN-VB 25-60	340	223	1392	859
IN-VB 25-70	340	223	1457	924
IN-VB 25-80	340	223	1522	989
IN-VB 25-90	340	223	1587	1054
IN-VB 25-100	340	223	1652	1119
IN-VB 25-110	340	223	1717	1184
IN-VB 25-120	360	234	1897	1249

IN-VB 40

Dimensions

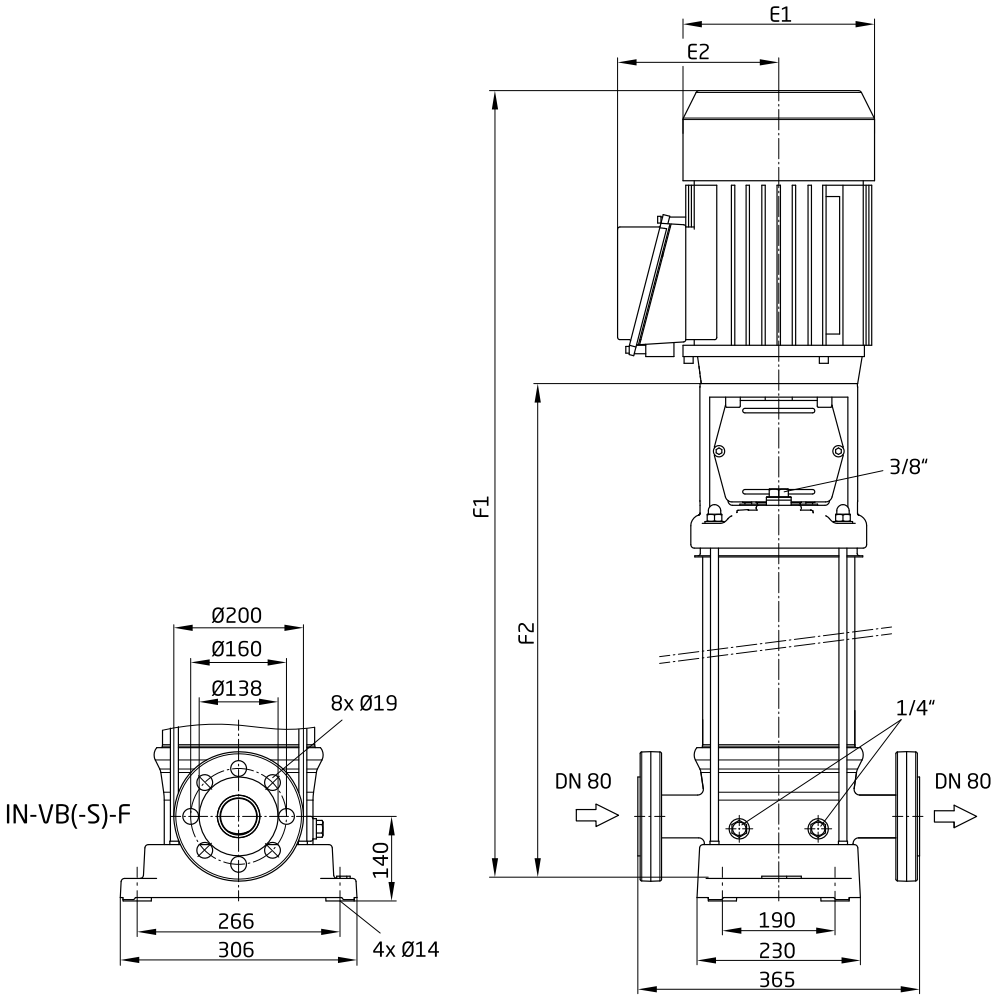

Type	Universal		IN-VB(-S)... F *)	
	E1	E2	F1	F2
IN-VB 40-10-1	199	150	804	487
IN-VB 40-10	241	165	843	487
IN-VB 40-20-2	288	197	1087	655
IN-VB 40-20	288	197	1087	655
IN-VB 40-30-2	340	223	1296	763
IN-VB 40-30	340	223	1296	763
IN-VB 40-40-2	340	223	1374	841
IN-VB 40-40	340	223	1374	841
IN-VB 40-50-2	340	223	1452	919
IN-VB 40-50	340	223	1452	919
IN-VB 40-60-2	340	223	1530	997
IN-VB 40-60	360	234	1645	997
IN-VB 40-70-2	360	234	1723	1075
IN-VB 40-70	400	340	1745	1075
IN-VB 40-80-2	400	340	1823	1153
IN-VB 40-80	400	340	1823	1153
IN-VB 40-90-2	400	340	1901	1231
IN-VB 40-90	400	340	1901	1231
IN-VB 40-100-2	400	340	1979	1309
IN-VB 40-100	400	340	1979	1309

IN-VB 60

Dimensions

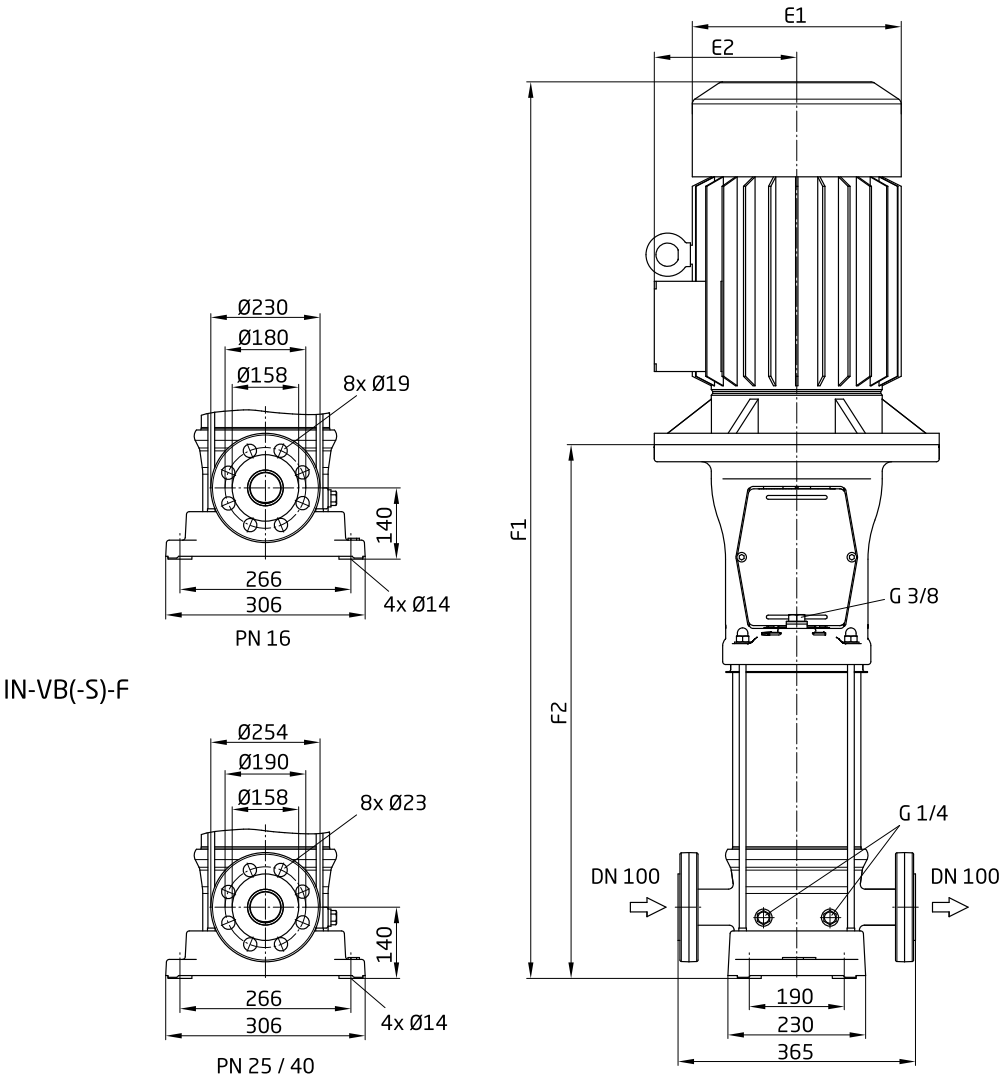

Type	Universal		IN-VB(-S)... F *)	
	E1	E2	F1	F2
IN-VB 60-10-1	241	165	843	487
IN-VB 60-10	288	197	1009	577
IN-VB 60-20-2	288	197	1087	655
IN-VB 60-20	340	223	1218	685
IN-VB 60-30-2	340	223	1296	763
IN-VB 60-30	340	223	1296	763
IN-VB 60-40-2	340	223	1374	841
IN-VB 60-40	360	234	1489	841
IN-VB 60-50-2	360	234	1567	919
IN-VB 60-50	400	340	1589	919
IN-VB 60-60-2	400	340	1667	997
IN-VB 60-60	400	340	1667	997
IN-VB 60-70-2	400	340	1745	1075
IN-VB 60-70	400	340	1745	1075
IN-VB 60-80-2	400	340	1823	1153
IN-VB 60-80	450	365	1863	1153
IN-VB 60-90-2	450	365	1941	1231

IN-VB 85

Dimensions

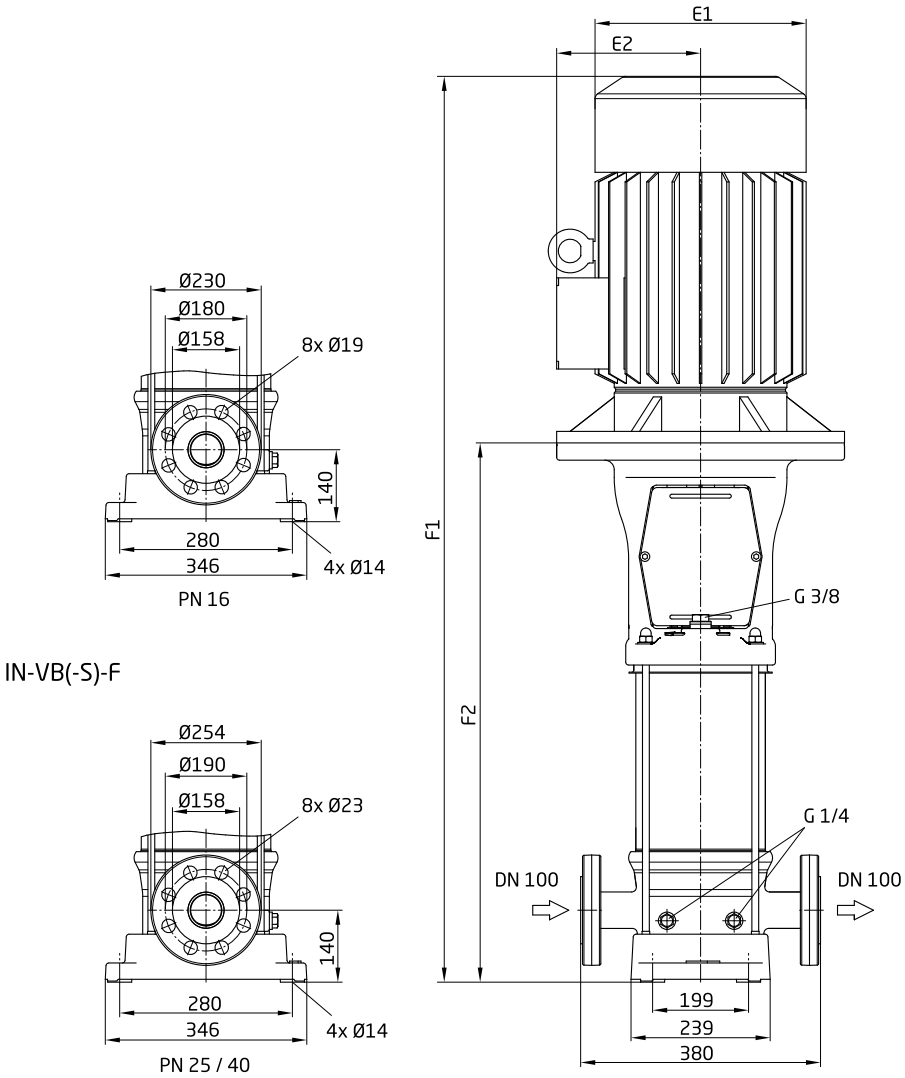

Type	Universal		IN-VB(-S)... F *)	
	E1	E2	F1	F2
IN-VB 85-10-1	288	197	1073	641
IN-VB 85-10	288	197	1073	641
IN-VB 85-20-2	340	223	1313	780
IN-VB 85-20-1	340	223	1313	780
IN-VB 85-20	340	223	1313	780
IN-VB 85-30-2	340	223	1422	889
IN-VB 85-30-1	360	234	1537	889
IN-VB 85-30	360	234	1537	889
IN-VB 85-40-2	400	340	1668	998
IN-VB 85-40-1	400	340	1668	998
IN-VB 85-40	400	340	1668	998
IN-VB 85-50-2	400	340	1777	1107
IN-VB 85-50-1	400	340	1777	1107
IN-VB 85-50	400	340	1777	1107
IN-VB 85-60-2	450	365	1926	1216
IN-VB 85-60-1	450	365	1926	1216
IN-VB 85-60	450	365	1926	1216

IN-VB 125

Dimensions

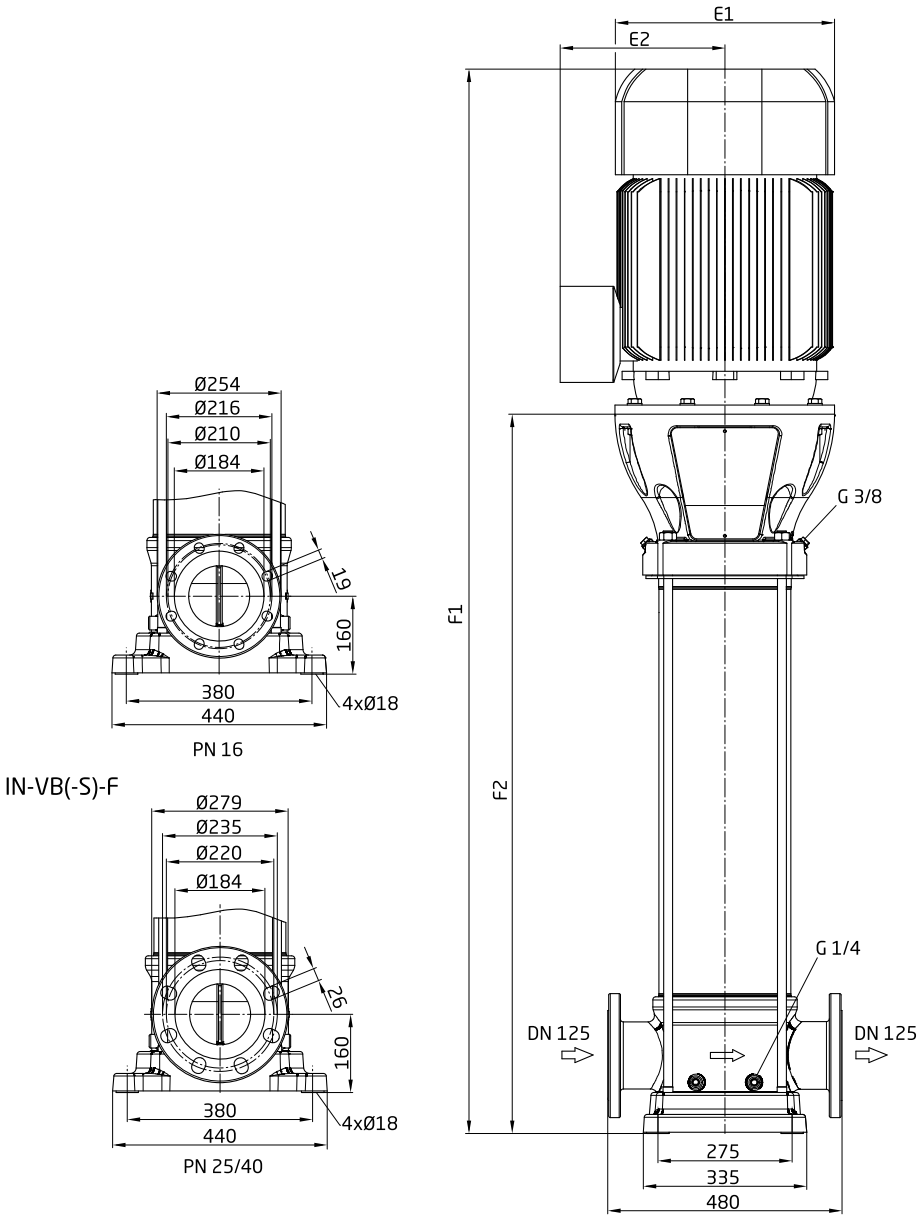

Type	Universal		IN-VB(-S)... F *)	
	E1	E2	F1	F2
IN-VB 125-10	340	223	1272	739
IN-VB 125-20-2	340	223	1402	869
IN-VB 125-20-1	360	234	1517	869
IN-VB 125-20	400	340	1539	869
IN-VB 125-30-2	400	340	1669	999
IN-VB 125-30-1	400	340	1669	999
IN-VB 125-30	400	340	1669	999
IN-VB 125-40-2	450	365	1829	1119

Horizontal pumps

Product overview

VGX/2VGX
Performance: 1 to 15 m³/h
Page 78

MTX
Performance: 1 to 27 m³/h
Page 86

VGX/2 VGX

Centrifugal pumps

Field of application
– Water treatment
– Water supply
– Cooling units
– Engineering

Design
Monoblock pump with surface-cooled motor, extended motor shaft to accommodate the impellers, shaft seal in the form of a mechanical seal, configured for constant operation.

Motor
Protection class ..... IP 55
Class of insulation ..... F
Voltage ..... 1~ 230 V ± 10 %
built in overload protection
Voltage ..... 3~ 400/230 V ± 10 %
Motor speed ..... 2850 rpm
Frequency ..... 50 Hz

Technical data
Flow rate ..... Q up to max. 15 m³/h
Total dynamic head ..... H up to max. 75 m
Fluid temperature ..... t from -10 to max. 90 °C
Operating pressure ..... p up to max. 8 bar

Pumped fluid
Clear, moderately aggressive fluids, which don't chemically and mechanically attack the pump materials.

Materials used
Pump housing ..... stainless steel AISI 304
Impellers ..... stainless steel AISI 304
Shaft ..... stainless steel AISI 303
Engine mount ..... die cast aluminium
Elastomers ..... NBR
Mechanical seal ..... carbon/ceramic

Type key
2 VGX 12/30
VGX ..... 1 stage pump type
2 VGX ..... 2 stage pump type
12/30 ..... pump size

Special editions
– Special voltages
– Special elastomers
– Special mechanical seals
– Higher fluid temperatures

VGX

Characteristics

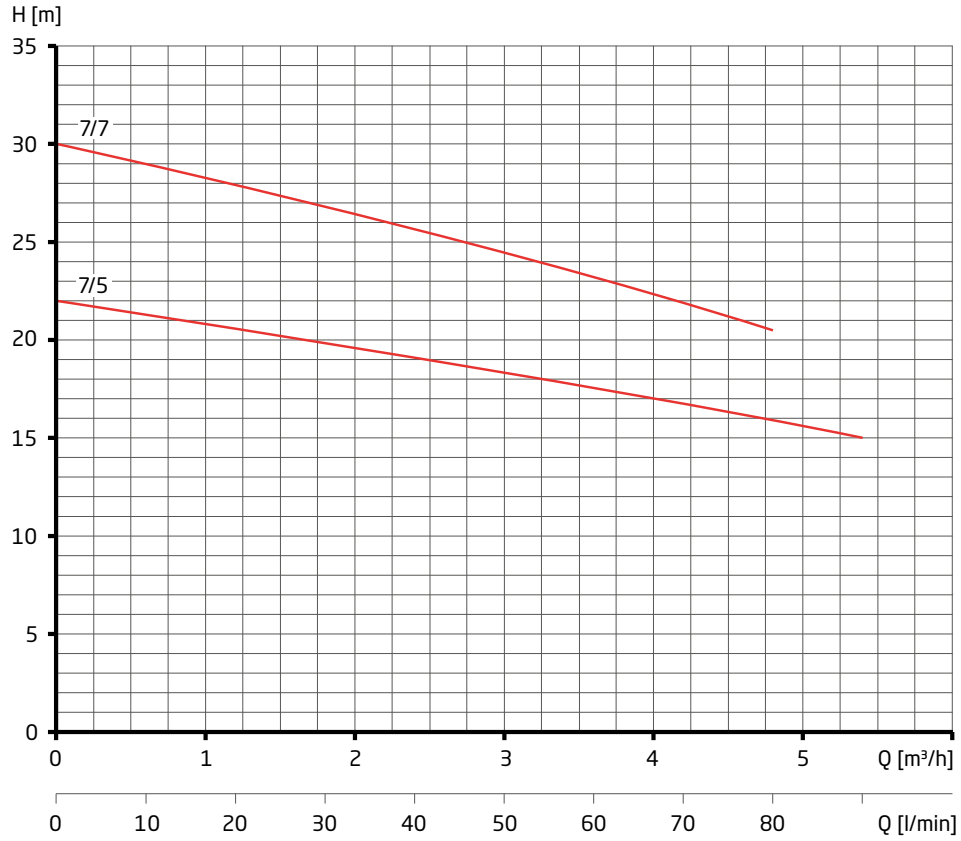

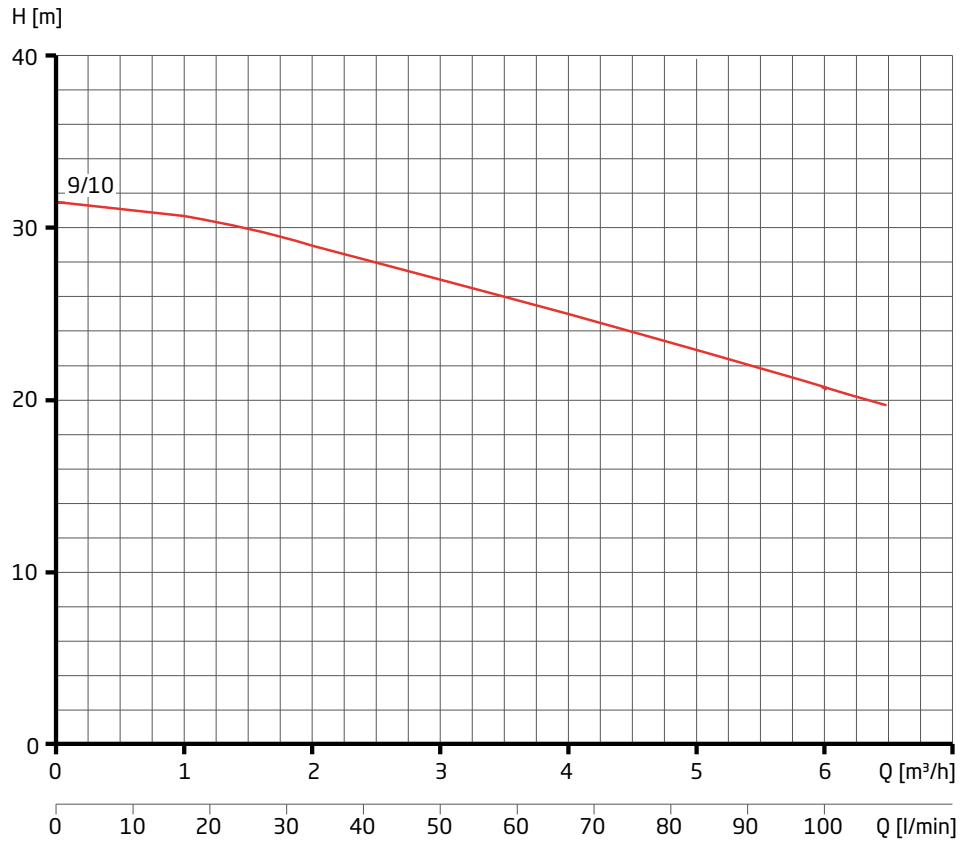

VGX

Characteristics

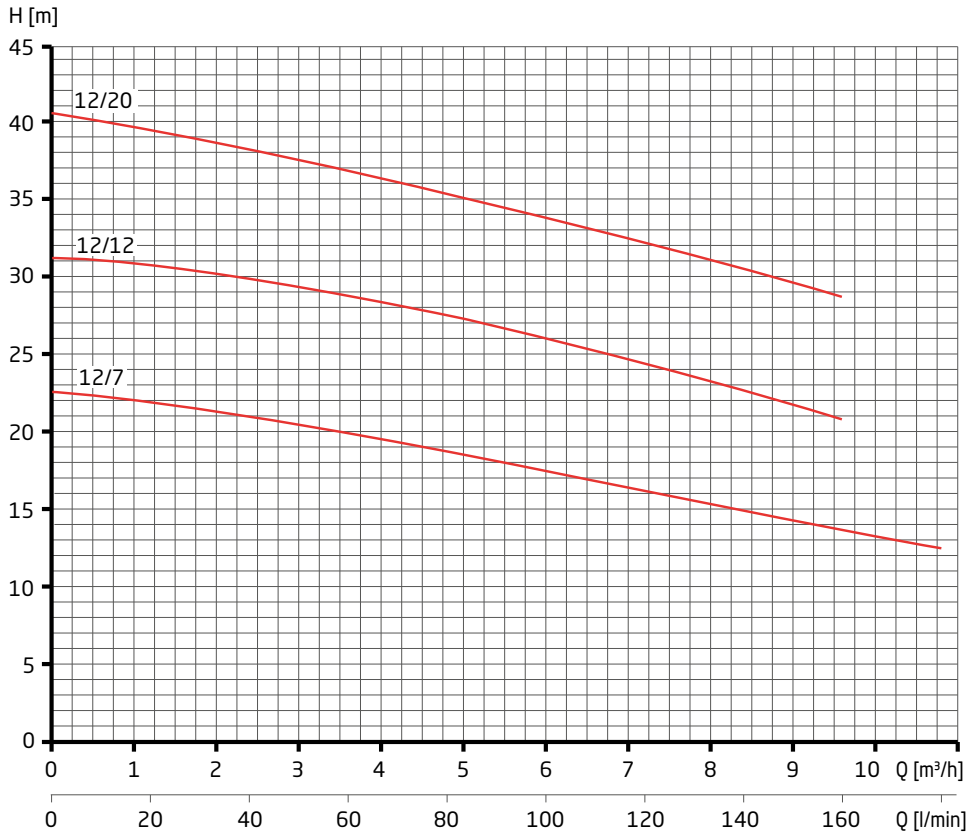

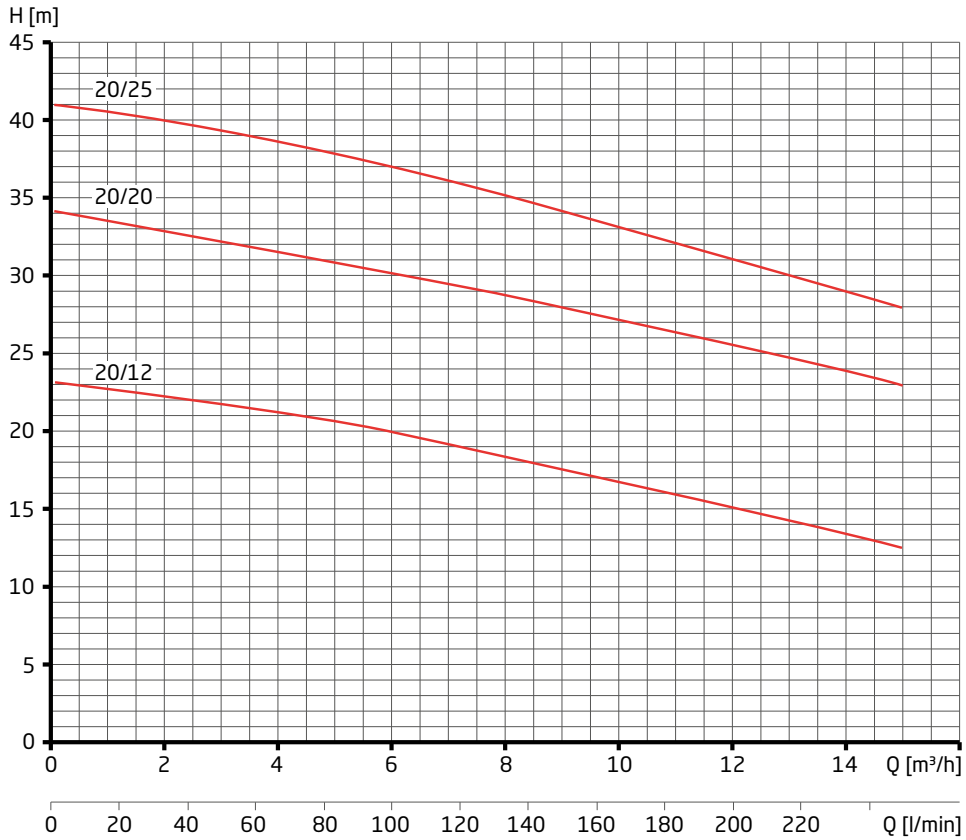

2 VGX

Characteristics

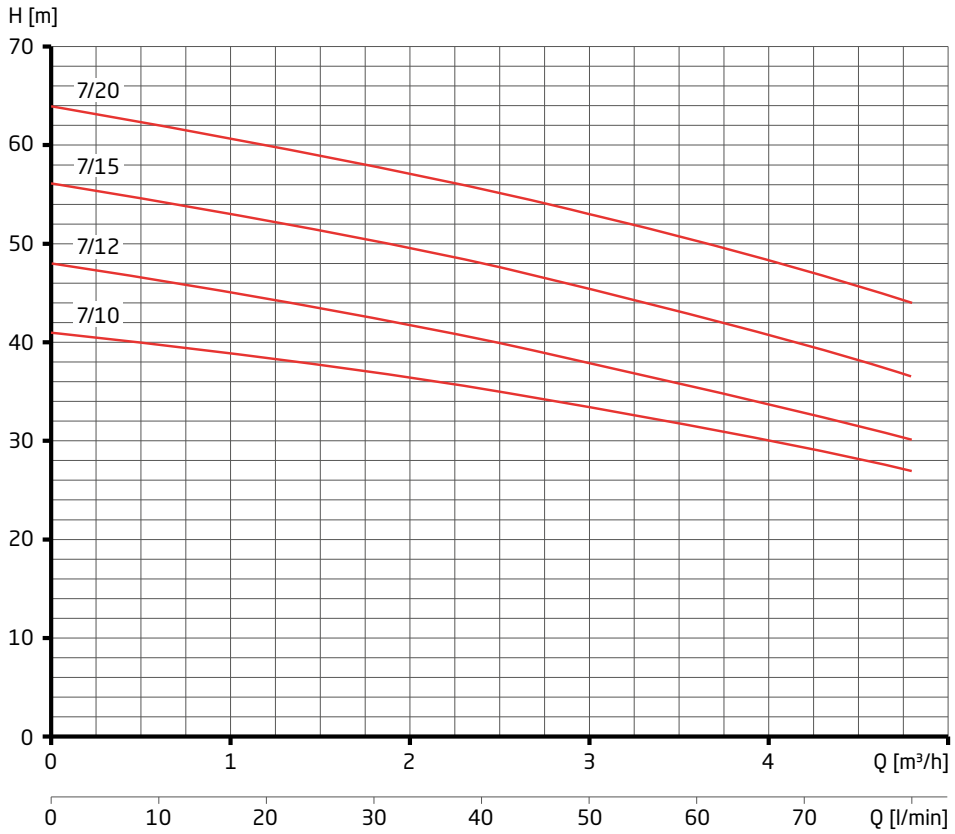

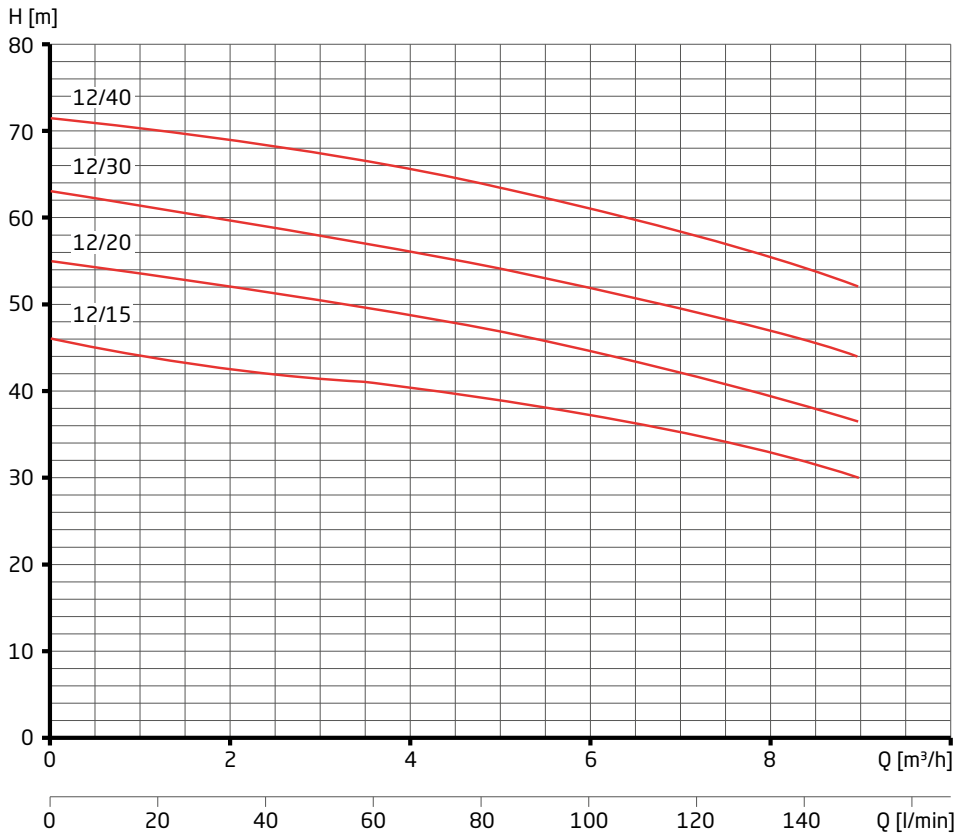

2 VGX

Characteristics

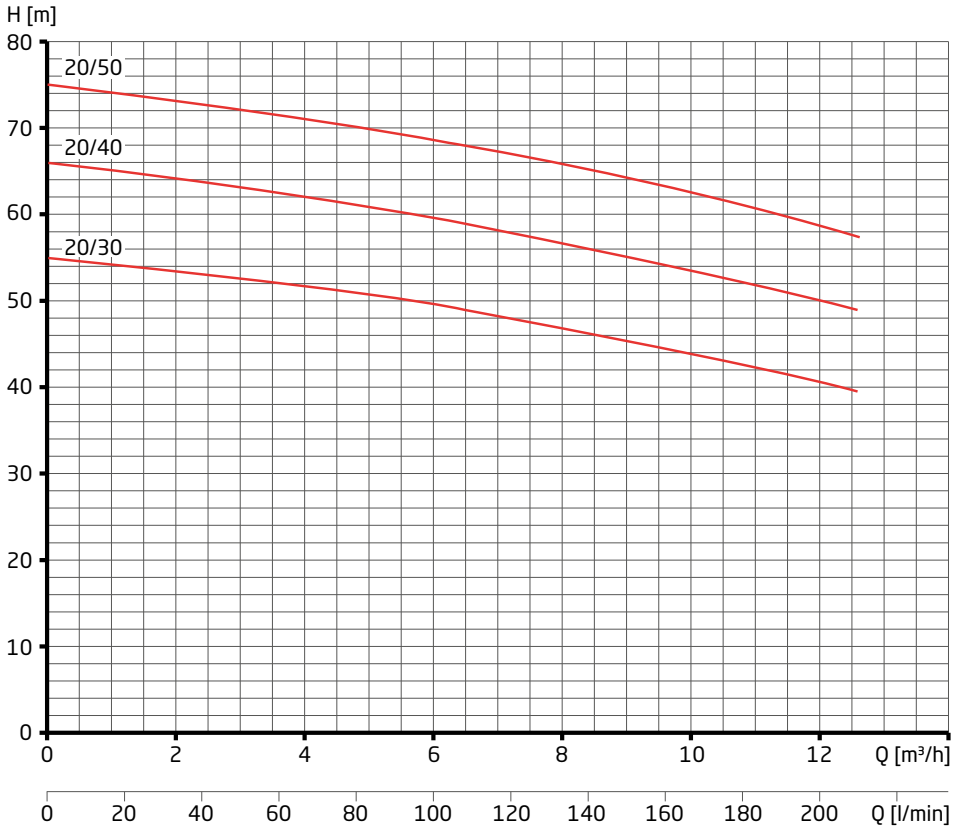

VGX/2 VGX

Technical data

Type	Inlet connection (Rp)	Outlet connection (Rp)	Power output P_2 (kW)	Rated current (A) 3~ Y/Δ 400/230 V	Rated current (A) 1~ 230 V	Weight (kg) 3~/1~
VGX 7/5	1 ¼	1	0.37	1.40/2.40	3.40	9.10/9.10
VGX 7/7	1 ¼	1	0.55	2.00/3.50	5.00	10.40/10.40
VGX 9/10	1 ¼	1	0.75	1.70/3.00	5.60	11.90/11.90
VGX 12/7	1 ¼	1	0.55	1.85/3.20	4.60	10.40/10.40
VGX 12/12	1 ¼	1	0.90	2.50/4.30	6.90	12.50/12.50
VGX 12/20	1 ¼	1	1.50	4.10/7.10	9.30	17.20/17.20
VGX 20/12	1 ½	1	0.90	2.50/4.30	6.30	16.30/16.30
VGX 20/20	1 ½	1	1.50	4.10/7.10	10.20	15.30/15.30
VGX 20/25	1 ½	1	1.80	4.70/8.20	-	17.00/-
2 VGX 7/10	1 ¼	1	0.75	1.70/3.00	6.00	12.60/12.60
2 VGX 7/12	1 ¼	1	0.90	2.50/4.30	7.00	13.70/13.70
2 VGX 7/15	1 ¼	1	1.10	3.30/5.80	8.10	17.00/17.00
2 VGX 7/20	1 ¼	1	1.50	4.10/7.10	10.00	20.10/19.20
2 VGX 12/15	1 ¼	1	1.10	3.30/5.80	8.30	15.60/15.60
2 VGX 12/20	1 ¼	1	1.50	4.10/7.10	10.20	18.30/17.40
2 VGX 12/30	1 ¼	1	2.20	4.70/8.20		26.10/-
2 VGX 12/40	1 ¼	1	3.00	6.40/11.10		27.80/-
2 VGX 20/30	1 ½	1	2.20	4.70/8.20		26.60/-
2 VGX 20/40	1 ½	1	3.00	6.40/11.10		27.60/-
2 VGX 20/50	1 ½	1	3.70	8.70/15.10		35.60/-

Order information

Type	Three-phase 3~ 400/230 V article no.	Net RRP	Gross RRP	Single phase 1~ 230 V article no.	Net RRP	Gross RRP
VGX 7/5	641.1100.137	**305.04 €**	363.00 €	641.1100.138	**325.21 €**	387.00 €
VGX 7/7	641.1101.137	**321.01 €**	382.00 €	641.1101.138	**341.18 €**	406.00 €
VGX 9/10	641.1202.137	**419.33 €**	499.00 €	641.1202.138	**427.73 €**	509.00 €
VGX 12/7	641.1301.137	**435.29 €**	518.00 €	641.1301.138	**465.55 €**	554.00 €
VGX 12/12	641.1303.137	**478.15 €**	569.00 €	641.1303.138	**540.34 €**	643.00 €
VGX 12/20	641.1305.137	**578.99 €**	689.00 €	641.1305.138	**641.18 €**	763.00 €
VGX 20/12	641.1403.137	**504.20 €**	600.00 €	641.1403.138	**556.30 €**	662.00 €
VGX 20/20	641.1405.137	**596.64 €**	710.00 €	641.1405.138	**712.61 €**	848.00 €
VGX 20/25	641.1406.137	**637.82 €**	759.00 €			
2 VGX 7/10	641.2102.137	**445.38 €**	530.00 €	641.2102.138	**463.87 €**	552.00 €
2 VGX 7/12	641.2103.137	**493.28 €**	587.00 €	641.2103.138	**520.17 €**	619.00 €
2 VGX 7/15	641.2104.137	**560.50 €**	667.00 €	641.2104.138	**565.55 €**	673.00 €
2 VGX 7/20	641.2105.137	**623.53 €**	742.00 €	641.2105.138	**636.13 €**	757.00 €
2 VGX 12/15	641.2304.137	**611.76 €**	728.00 €	641.2304.138	**670.59 €**	798.00 €
2 VGX 12/20	641.2305.137	**688.24 €**	819.00 €	641.2305.138	**790.76 €**	941.00 €
2 VGX 12/30	641.2307.137	**928.57 €**	1,105.00 €			
2 VGX 12/40	641.2308.137	**984.03 €**	1,171.00 €			
2 VGX 20/30	641.2407.137	**914.29 €**	1,088.00 €			
2 VGX 20/40	641.2408.137	**950.42 €**	1,131.00 €			
2 VGX 20/50	641.2409.137	**1,099.16 €**	1,308.00 €			

VGX

Dimensions

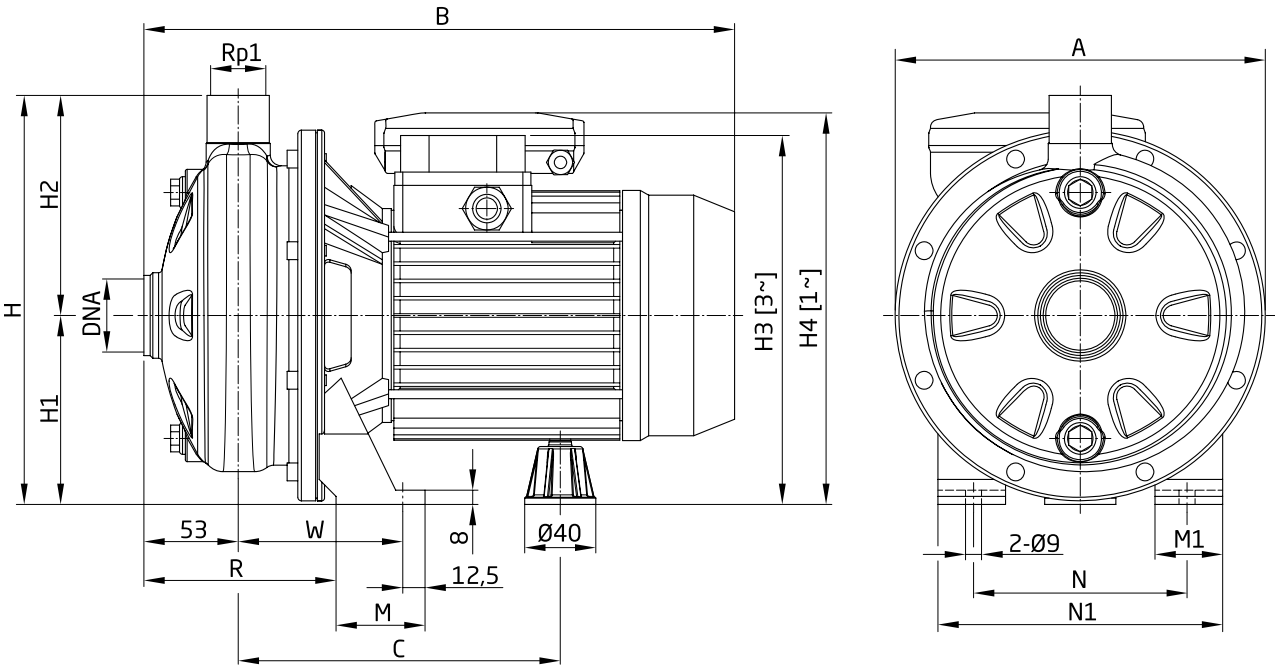

Type	A	B 3~/1~	C	H	H1	H2	H3	H4	M	M1	N	N1	R	W	DNA Rp
VGX 7/5	208	320/321	181	229.5	106	123.5	207	216	50	38	120	160	108	92.5	1 ¼
VGX 7/7	208	320/321	181	229.5	106	123.5	207	216	50	38	120	160	108	92.5	1 ¼
VGX 9/10	208	320/321	198.5	229.5	106	123.5	207	216	50	38	120	160	108	92.5	1 ¼
VGX 12/7	208	320/321	198.5	229.5	106	123.5	207	216	50	38	120	160	108	92.5	1 ¼
VGX 12/12	208	332/321	198.5	229.5	106	123.5	207	235	50	38	120	160	108	92.5	1 ¼
VGX 12/20	232	371.5/346.5	198.5	250	118	132	237	248.5	55	40	140	180	105.5	95	1 ¼
VGX 20/12	208	332/321	181	229.5	106	123.5	207	235	50	38	120	160	108	92.5	1 ½
VGX 20/20	208	371.5/346.5	198.5	229.5	106	123.5	225	236.5	55	40	140	180	105.5	95	1 ½
VGX 20/25	232	371.5/-	198.5	250	118	132	237	--	55	40	140	180	105.5	95	1 ½

2 VGX

Dimensions

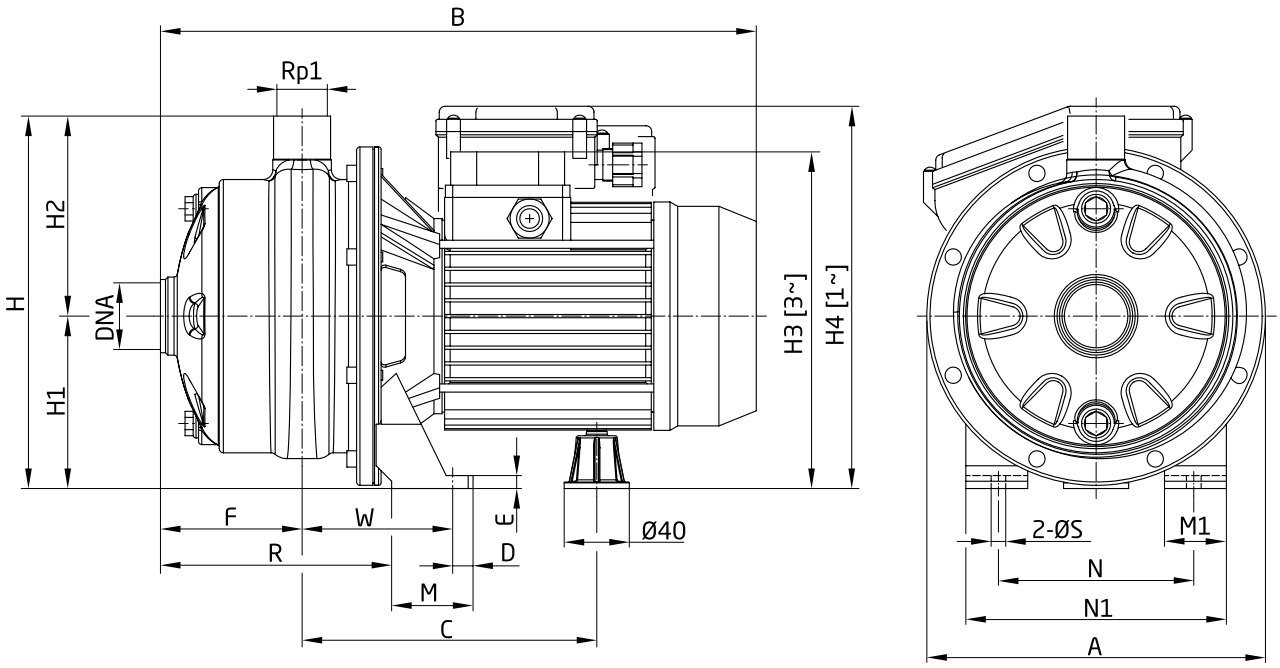

Type	A	B 3~/1~	C	D	E	F	H	H1	H2	H3	H4	M	M1	N	N1	R	W	S	DNA Rp
2 VGX 7/10	208	354/355	181	12.5	8	87	229	106	123	209	216	50	38	120	160	142	92.5	9	1 ¼
2 VGX 7/12	210	366/355	181	12.5	8	87	229	106	123	209	235	50	38	120	160	142	92.5	9	1 ¼
2 VGX 7/15	232	407/395.5	198.5	12.5	8	89	250	118	132	235	248.5	55	40	140	180	141.5	95	9	1 ¼
2 VGX 7/20	232	407.5/382.5	198.5	12.5	8	89	250	118	132	235	248.5	55	40	140	180	141.5	95	9	1 ¼
2 VGX 12/15	210	407/395.5	198.5	12.5	8	89	229	106	123	223	236.5	55	40	140	180	141.5	95	9	1 ¼
2 VGX 12/20	210	407.5/382.5	198.5	12.5	8	89	229	106	123	223	236.5	55	40	140	180	141.5	95	9	1 ¼
2 VGX 12/30	232	405/-	198.5	12.5	10	87	250	118	132	240	-	65	40	140	180	143.5	109	9	1 ¼
2 VGX 12/40	232	458/-	234.5	12.5	10	87	250	118	132	240	-	65	40	140	180	143.5	109	9	1 ¼
2 VGX 20/30	208	458/-	234.5	12.5	10	87	229	106	123	240	-	65	40	140	180	143.5	109	9	1 ½
2 VGX 20/40	232	458/-	234.5	12.5	10	87	250	118	132	240	-	65	40	140	180	143.5	109	9	1 ½
2 VGX 20/50	232	481/-	232.5	16	12	87	250	118	132	252	-	68	50	160	210	143.5	108.5	12	1 ½

MTX

Centrifugal pumps

Field of application
– Water treatment
– Water supply
– Cooling units
– Engineering

Design
Monoblock pump with surface-cooled motor, extended motor shaft to accommodate the impellers, shaft seal in the form of a mechanical seal, configured for constant operation.

Motor
Protection class ..... IP 55
Class of insulation ..... F
Voltage ..... 1~ 230 V ± 10 %
built in overload protection
Voltage ..... 3~ 400/230 V ± 10 %
Motor speed ..... 2850 rpm
Frequency ..... 50 Hz

Technical data
Flow rate ..... Q up to max. 27 m³/h
Total dynamic head ..... H up to max. 105 m
Fluid temperature ..... t from -15 to max 85 °C
Operating pressure ..... p up to max. 10 bar

Pumped fluid
Clear, moderately aggressive fluids, which don't chemically and mechanically attack the pump materials.

Materials used
Pump housing ..... stainless steel AISI 304
Impellers ..... stainless steel AISI 304
Shaft ..... stainless steel AISI 304
Seal mount ..... stainless steel AISI 304
Engine mount ..... die cast aluminium
Elastomers ..... EPDM
Mechanical seal ..... carbon/ceramic

Type key
MTX 5-60
MTX ..... pump type
5 ..... pump size
60 ..... number of stages x 10

Special editions
– Special voltage
– Special elastomers
– Special mechanical seals
– Higher fluid temperatures

MTX

Characteristics

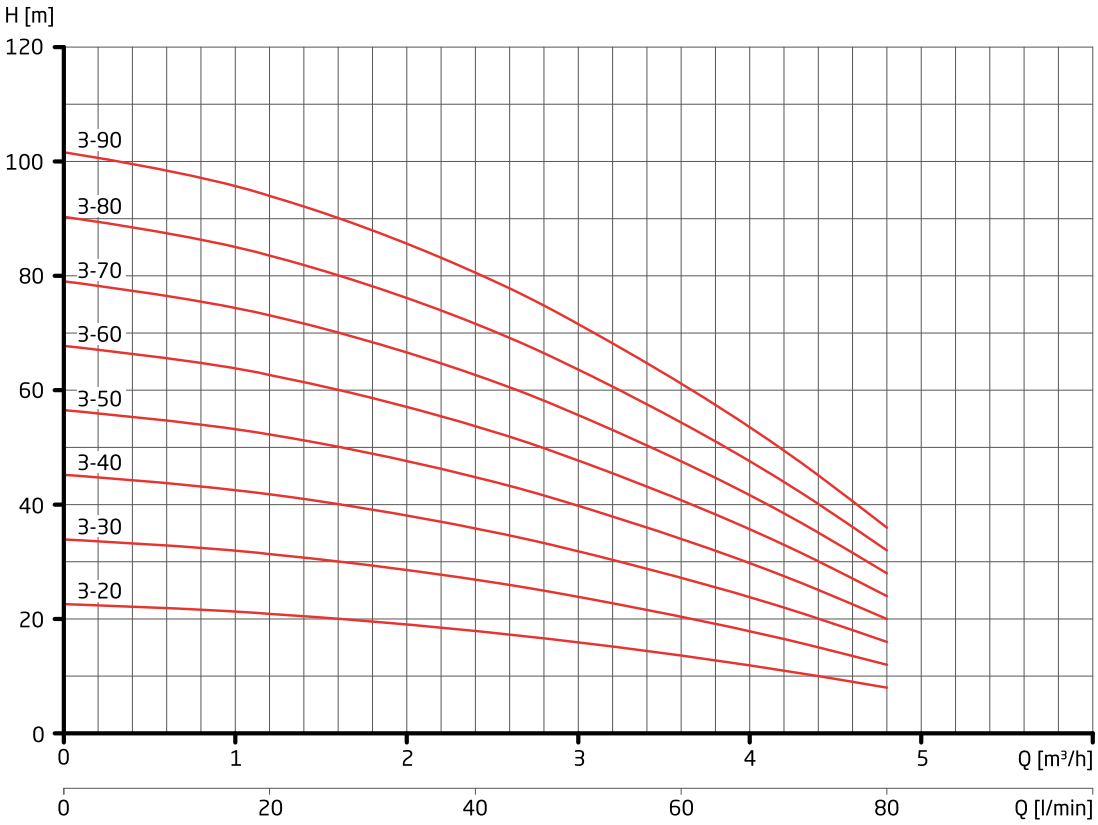

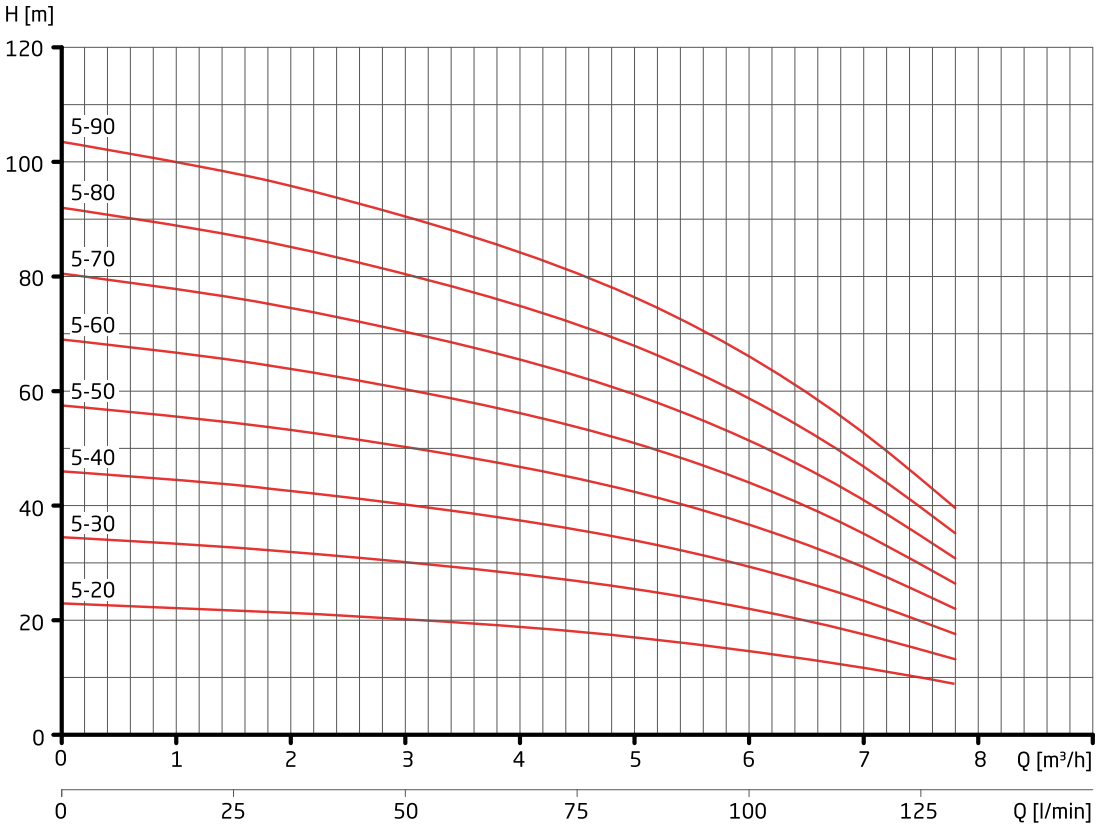

MTX

Characteristics

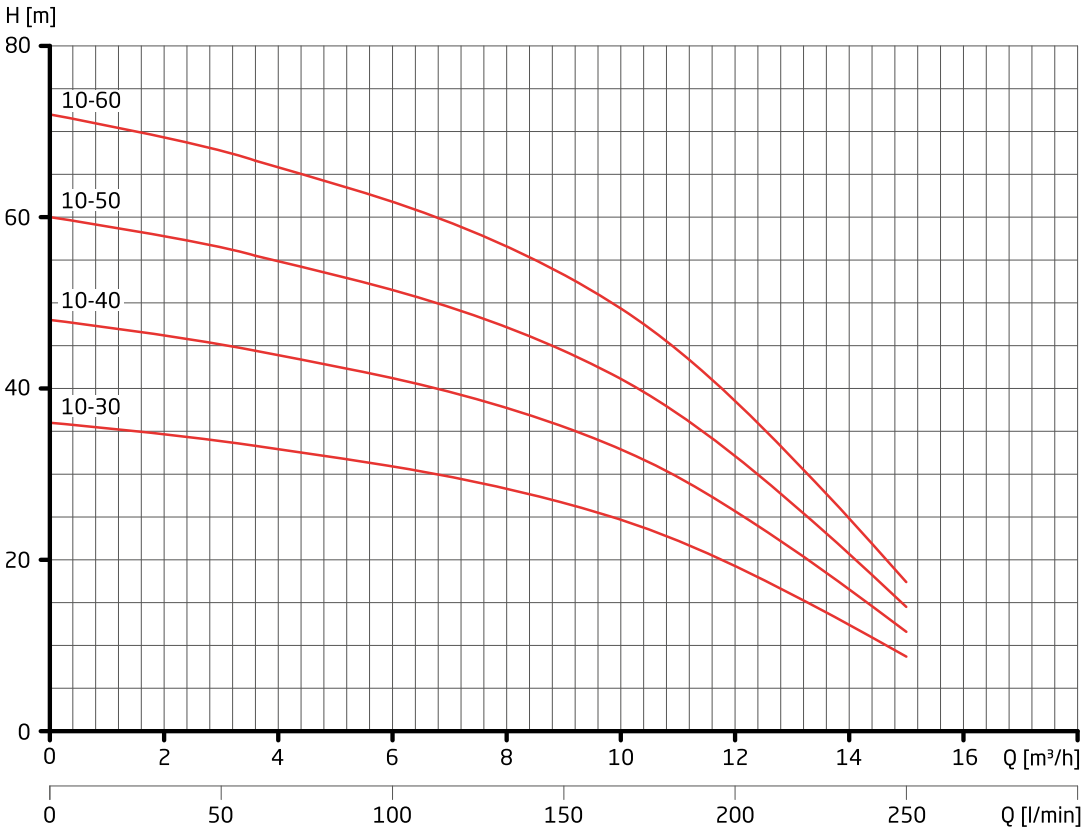

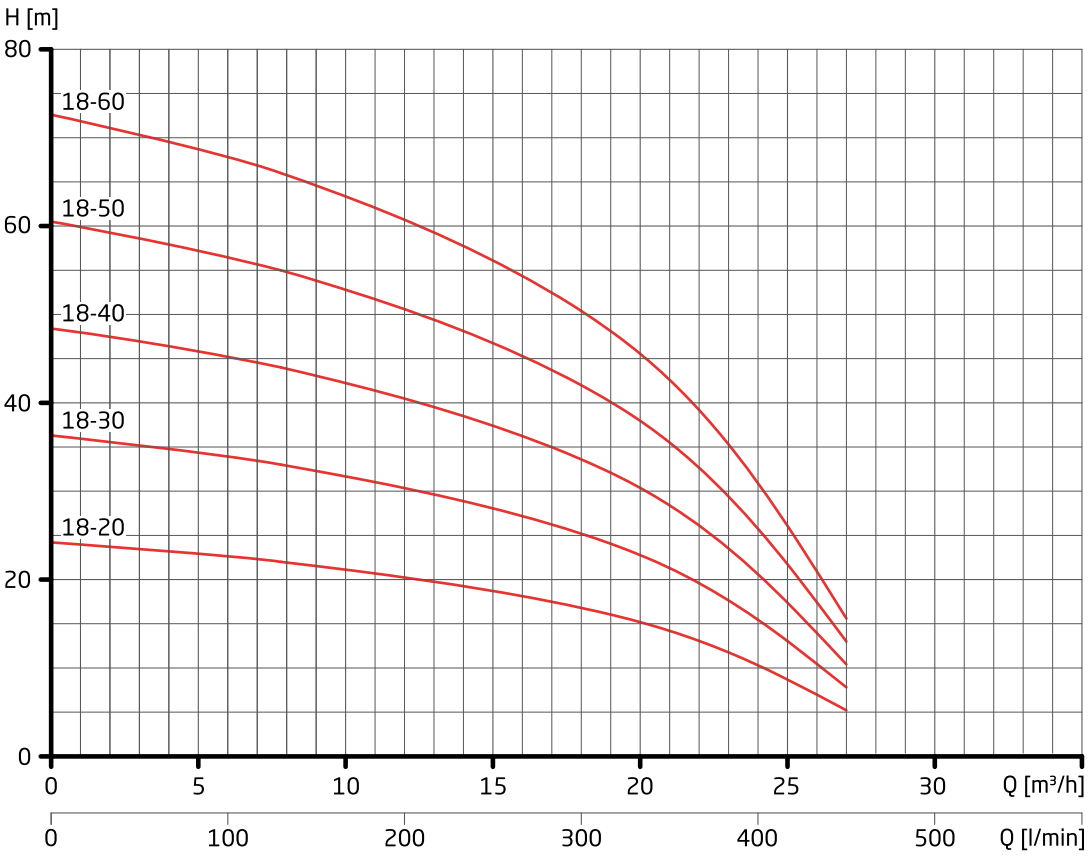

MTX

Technical data

Type	Inlet connection (Rp)	Outlet connection (Rp)	Power output P_2 (kW)	Rated current (A) 3~ Y/Δ 400/230 V	Rated current (A) 1~ 230 V	Weight (kg) 3~/1~
MTX 3-20	1	1	0.45	1.30/2.30	3.20	8.50/8.50
MTX 3-30	1	1	0.65	1.60/2.80	4.50	9.90/9.90
MTX 3-40	1	1	0.65	1.60/2.80	4.50	10.90/10.90
MTX 3-50	1	1	0.75	1.70/3.00	5.40	12.40/12.50
MTX 3-60	1	1	0.90	2.50/4.30	5.70	13.60/13.70
MTX 3-70	1	1	1.30	3.30/5.80	7.80	17.90/17.00
MTX 3-80	1	1	1.30	3.30/5.80	7.80	18.70/17.80
MTX 3-90	1	1	1.50	3.80/6.60	8.70	20.90/20.00
MTX 5-20	1 ¼	1	0.45	1.30/2.30	3.20	8.50/8.50
MTX 5-30	1 ¼	1	0.65	1.60/2.80	4.50	9.90/9.90
MTX 5-40	1 ¼	1	0.90	2.50/4.30	5.70	12.40/12.40
MTX 5-50	1 ¼	1	1.30	3.30/5.80	7.80	16.70/15.80
MTX 5-60	1 ¼	1	1.30	3.30/5.80	7.80	17.10/16.20
MTX 5-70	1 ¼	1	1.50	3.80/6.60	8.70	19.60/18.70
MTX 5-80	1 ¼	1	2.20	4.70/8.20	13.00	19.60/18.70
MTX 5-90	1 ¼	1	2.20	4.70/8.20	13.00	19.70/18.80
MTX 10-30	1 ½	1 ¼	1.30	3.30/5.80	7.80	14.50/13.60
MTX 10-40	1 ½	1 ¼	1.50	3.80/6.60	8.70	18.20/17.30
MTX 10-50	1 ½	1 ¼	2.20	4.70/8.20	13.00	18.80/17.90
MTX 10-60	1 ½	1 ¼	2.20	4.70/8.20	13.00	19.20/18.30
MTX 18-20	2	1 ½	1.50	3.80/6.60	8.70	17.10/16.20
MTX 18-30	2	1 ½	2.20	4.70/8.20	13.00	18.10/17.20
MTX 18-40	2	1 ½	3.00	6.40/11.10	-	23.80/-
MTX 18-50	2	1 ½	4.00	8.70/15.10	-	33.20/-
MTX 18-60	2	1 ½	4.00	8.70/15.10	-	34.20/-

Order information

Type	Three-phase 3~ 400/230 V article no.	Net RRP	Gross RRP	Single phase 1~ 230 V artile no.	Net RRP	Gross RRP
MTX 3-20	644.0302.067	**304.20 €**	362.00 €	644.0302.068	**321.85 €**	383.00 €
MTX 3-30	644.0303.067	**323.53 €**	385.00 €	644.0303.068	**338.66 €**	403.00 €
MTX 3-40	644.0304.067	**365.55 €**	435.00 €	644.0304.068	**381.51 €**	454.00 €
MTX 3-50	644.0305.067	**402.52 €**	479.00 €	644.0305.068	**405.88 €**	483.00 €
MTX 3-60	644.0306.067	**457.98 €**	545.00 €	644.0306.068	**458.82 €**	546.00 €
MTX 3-70	644.0307.067	**571.43 €**	680.00 €	644.0307.068	**569.75 €**	678.00 €
MTX 3-80	644.0308.067	**604.20 €**	719.00 €	644.0308.068	**601.68 €**	716.00 €
MTX 3-90	644.0309.067	**640.34 €**	762.00 €	644.0309.068	**636.13 €**	757.00 €
MTX 5-20	644.0502.067	**336.13 €**	400.00 €	644.0502.068	**359.66 €**	428.00 €
MTX 5-30	644.0503.067	**364.71 €**	434.00 €	644.0503.068	**381.51 €**	454.00 €
MTX 5-40	644.0504.067	**436.97 €**	520.00 €	644.0504.068	**441.18 €**	525.00 €
MTX 5-50	644.0505.067	**502.52 €**	598.00 €	644.0505.068	**505.04 €**	601.00 €
MTX 5-60	644.0506.067	**534.45 €**	636.00 €	644.0506.068	**533.61 €**	635.00 €
MTX 5-70	644.0507.067	**584.03 €**	695.00 €	644.0507.068	**584.03 €**	695.00 €
MTX 5-80	644.0508.067	**685.71 €**	816.00 €	644.0508.068	**680.67 €**	810.00 €
MTX 5-90	644.0509.067	**716.81 €**	853.00 €	644.0509.068	**710.92 €**	846.00 €
MTX 10-30	644.1003.067	**604.20 €**	719.00 €	644.1003.068	**601.68 €**	716.00 €
MTX 10-40	644.1004.067	**666.39 €**	793.00 €	644.1004.068	**661.34 €**	787.00 €
MTX 10-50	644.1005.067	**691.60 €**	823.00 €	644.1005.068	**687.39 €**	818.00 €
MTX 10-60	644.1006.067	**734.45 €**	874.00 €	644.1006.068	**731.09 €**	870.00 €
MTX 18-20	644.1802.067	**702.52 €**	836.00 €	644.1802.068	**697.48 €**	830.00 €
MTX 18-30	644.1803.067	**752.94 €**	896.00 €	644.1803.068	**748.74 €**	891.00 €
MTX 18-40	644.1804.067	**874.79 €**	1,041.00 €			
MTX 18-50	644.1805.067	**914.29 €**	1,088.00 €			
MTX 18-60	644.1806.067	**967.23 €**	1,151.00 €			

MTX

Dimensions

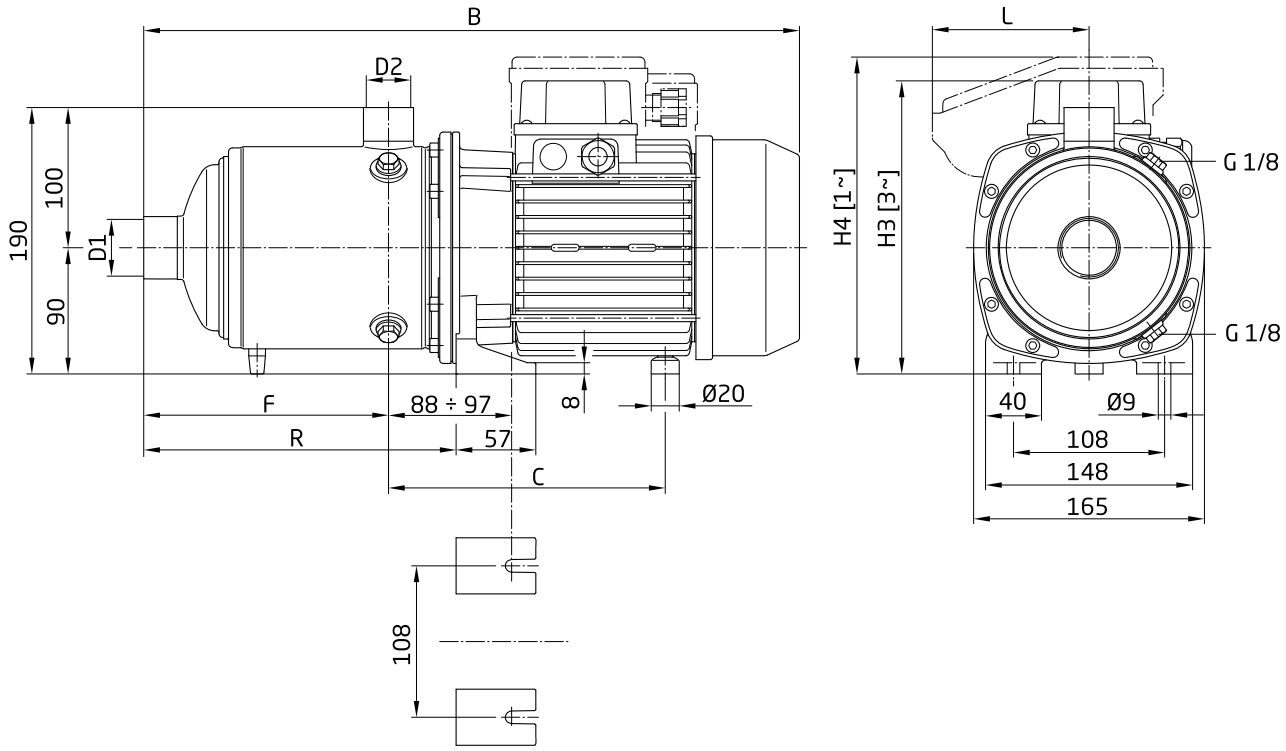

Type	D1	D2	B	C	F	H3	H4	L	R
MTX 3-20 1~	Rp 1	Rp 1	360	171	103	-	200	86.5	151.5
MTX 3-20 3~	Rp 1	Rp 1	360	171	103	192	-	-	151.5
MTX 3-30 1~	Rp 1	Rp 1	360	171	103	-	200	86.5	151.5
MTX 3-30 3~	Rp 1	Rp 1	360	171	103	192	-	-	151.5
MTX 3-40 1~	Rp 1	Rp 1	384	171	127	-	200	86.5	175.5
MTX 3-40 3~	Rp 1	Rp 1	384	171	127	192	-	-	175.5
MTX 3-50 1~	Rp 1	Rp 1	408	171	151	-	200	86.5	199.5
MTX 3-50 3~	Rp 1	Rp 1	408	171	151	192	-	-	199.5
MTX 3-60 1~	Rp 1	Rp 1	432	171	175	-	219	106	223.5
MTX 3-60 3~	Rp 1	Rp 1	444	171	175	192	-	-	223.5
MTX 3-70 1~	Rp 1	Rp 1	493	198	199	-	226	112	247.5
MTX 3-70 3~	Rp 1	Rp 1	518	198	199	209	-	-	247.5
MTX 3-80 1~	Rp 1	Rp 1	517	198	223	-	226	112	271.5
MTX 3-80 3~	Rp 1	Rp 1	542	198	223	209	-	-	271.5
MTX 3-90 1~	Rp 1	Rp 1	541	198	247	-	226	112	295.5
MTX 3-90 3~	Rp 1	Rp 1	567	198	247	209	-	-	295.5

MTX

Dimensions

Abb. 1/ Fig. 1

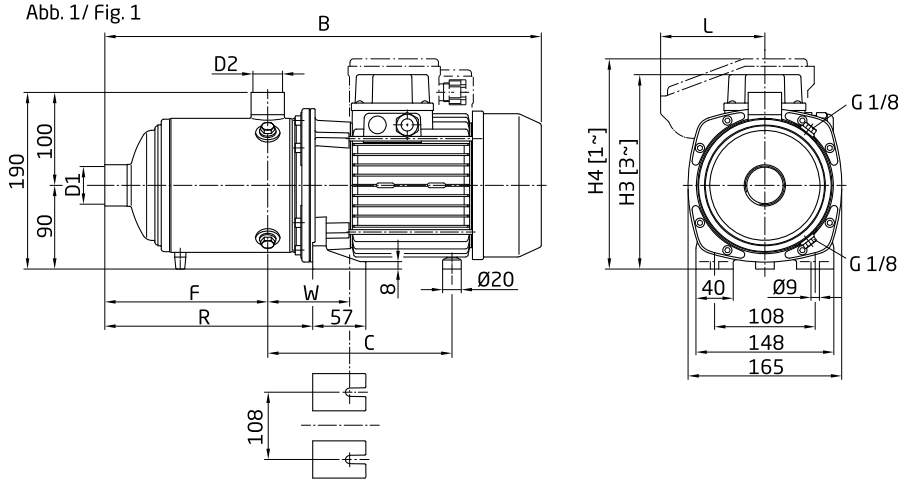

Abb. 2/ Fig. 2

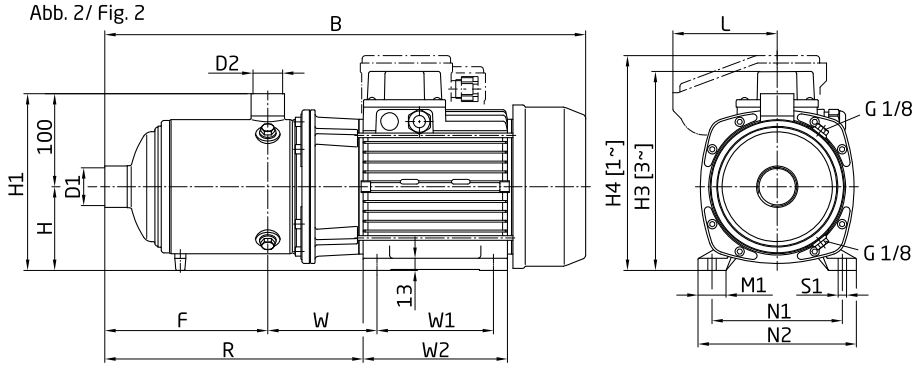

Figure 1

Type	D1	D2	B	C	F	H3	H4	L	R	W
MTX 5-20 1~	Rp 1 ¼	Rp 1	360	171	103	-	200	86.5	151.5	88-97
MTX 5-20 3~	Rp 1 ¼	Rp 1	360	171	103	192	-	-	151.5	88-97
MTX 5-30 1~	Rp 1 ¼	Rp 1	360	171	103	-	200	86.5	151.5	88-97
MTX 5-30 3~	Rp 1 ¼	Rp 1	360	171	103	192	-	-	151.5	88-97
MTX 5-40 1~	Rp 1 ¼	Rp 1	384	171	127	-	219	106	175.5	88-97
MTX 5-40 3~	Rp 1 ¼	Rp 1	396	171	127	192	-	-	175.5	88-97
MTX 5-50 1~	Rp 1 ¼	Rp 1	445	198	151	-	226	112	199.5	88-97
MTX 5-50 3~	Rp 1 ¼	Rp 1	470	198	151	209	-	-	199.5	88-97
MTX 5-60 1~	Rp 1 ¼	Rp 1	469	198	175	-	226	112	223.5	88-97
MTX 5-60 3~	Rp 1 ¼	Rp 1	494	198	175	209	-	-	223.5	88-97
MTX 5-70 1~	Rp 1 ¼	Rp 1	493	198	199	-	226	112	247.5	88-97
MTX 5-70 3~	Rp 1 ¼	Rp 1	518.5	198	199	209	-	-	247.5	88-97
MTX 5-80 1~	Rp 1 ¼	Rp 1	565	-	223	-	231	112	325.5	117.5
MTX 5-80 3~	Rp 1 ¼	Rp 1	542.5	198	223	209	-	-	271.5	88-97
MTX 5-90 1~	Rp 1 ¼	Rp 1	589	-	247	-	231	112	349.5	117.5
MTX 5-90 3 ~	Rp 1 ¼	Rp 1	566.5	198	247	209	-	-	295.5	88-97

Figure 2

Type	H	H1	W1	W2	M1	N1	N2	S1
MTX 5-80 1~	90	190	125	155	30	140	170	9
MTX 5-90 1~	90	190	125	155	30	140	170	9

Missing dimensions can be taken from the table “Figure 1”.

MTX

Dimensions

Abb. 1/ Fig. 1

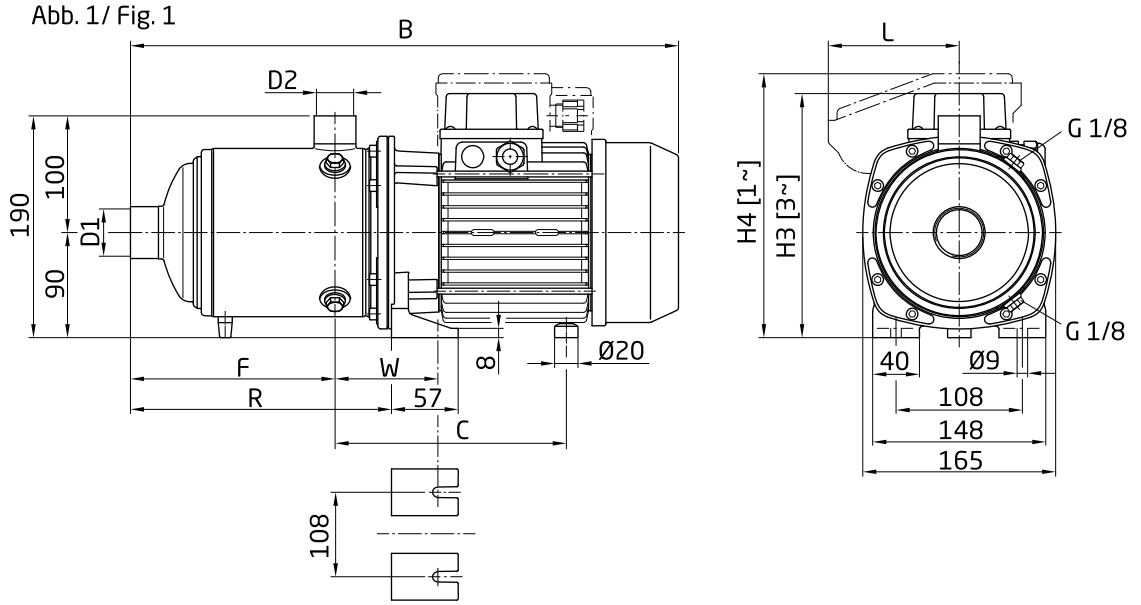

Abb. 2/ Fig. 2

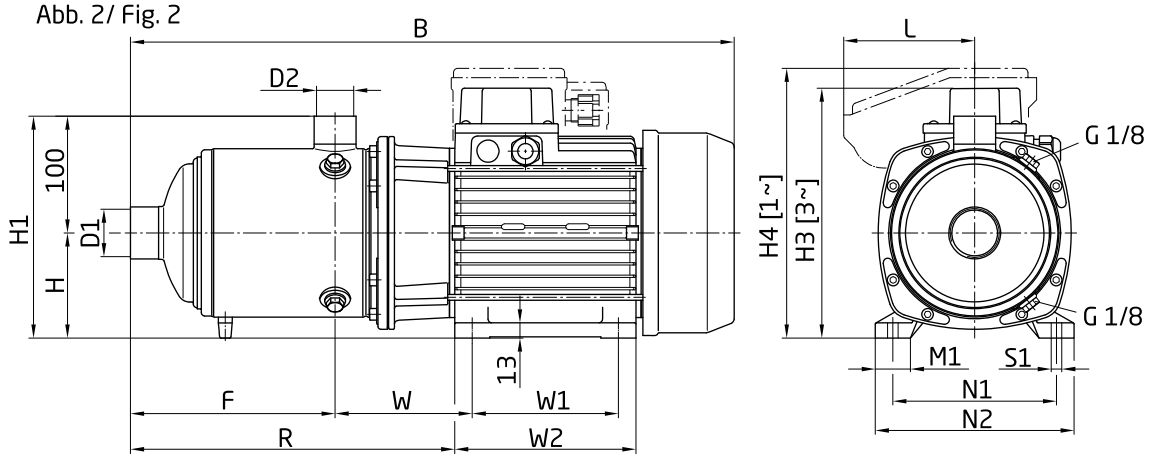

Figure 1

Type	D1	D2	B	C	F	H3	H4	L	R	W
MTX 10-20 1~	Rp 1 ½	Rp 1 ¼	379	175	118	-	200	86.5	170.5	92-101
MTX 10-20 3~	Rp 1 ½	Rp 1 ¼	379	175	118	192	-	-	170.5	92-101
MTX 10-30 1~	Rp 1 ½	Rp 1 ¼	416	202	118	-	226	112	170.5	92-101
MTX 10-30 3~	Rp 1 ½	Rp 1 ¼	441	202	118	209	-	-	170.5	92-101
MTX 10-40 1~	Rp 1 ½	Rp 1 ¼	446	202	148	-	226	112	200.5	92-101
MTX 10-40 3~	Rp 1 ½	Rp 1 ¼	471.5	202	148	209	-	-	200.5	92-101
MTX 10-50 1~	Rp 1 ½	Rp 1 ¼	524	-	178	-	231	112	284.5	121.5
MTX 10-50 3~	Rp 1 ½	Rp 1 ¼	501.5	202	178	209	-	-	230.5	92-101
MTX 10-60 1~	Rp 1 ½	Rp 1 ¼	554	-	208	-	231	112	314.5	121.5
MTX 10-60 3~	Rp 1 ½	Rp 1 ¼	531.5	202	208	209	-	-	260.5	92-101

Figure 2

Type	H	H1	W1	W2	M1	N1	N2	S1
MTX 10-50 1~	90	190	125	155	30	140	170	9
MTX 10-60 1~	90	190	125	155	30	140	170	9

Missing dimensions can be taken from the table “Figure 1”.

MTX

Dimensions

Abb. 1/ Fig. 1

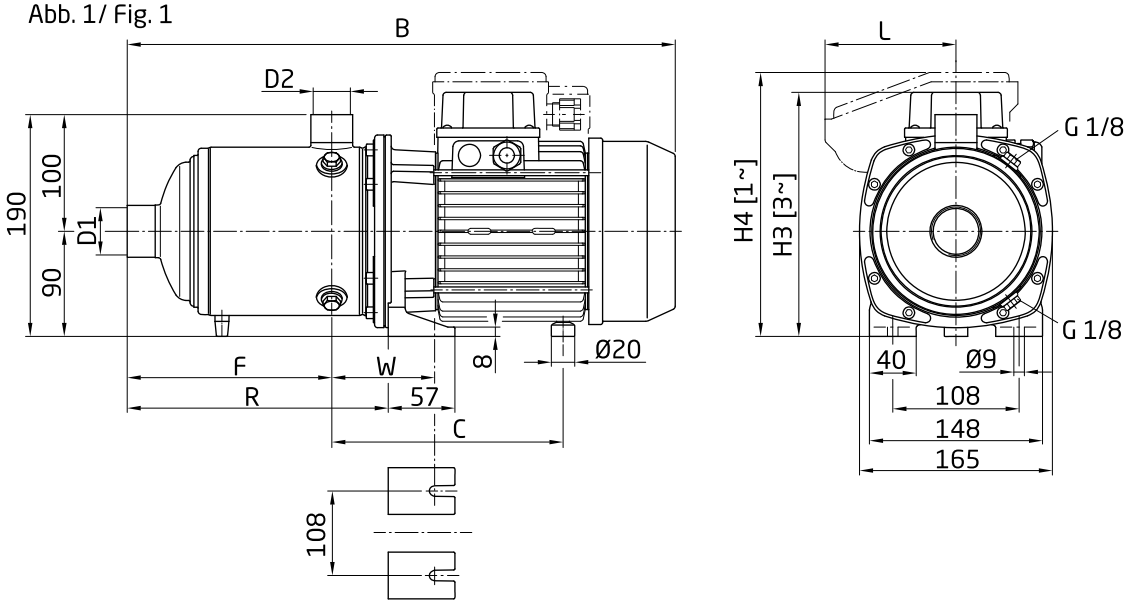

Abb. 2/ Fig. 2

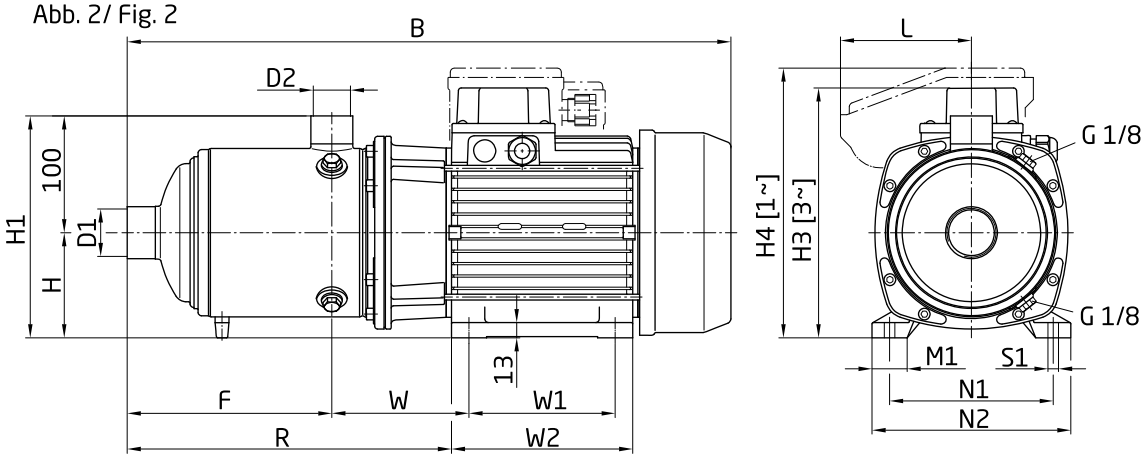

Figure 1

Type	D1	D2	B	C	F	H3	H4	L	R	W
MTX 18-20 1~	Rp 2	Rp 1 ½	442	205	141	-	226	112	196.5	95-104
MTX 18-20 3~	Rp 2	Rp 1 ½	467.5	205	141	209	-	-	196.5	95-104
MTX 18-30 1~	Rp 2	Rp 1 ½	490	-	141	-	231	112	250.5	124.5
MTX 18-30 3~	Rp 2	Rp 1 ½	467.5	205	141	209	-	-	196.5	95-104
MTX 18-40 3~	Rp 2	Rp 1 ½	565	-	178.5	214	-	-	288	124.5
MTX 18-50 3~	Rp 2	Rp 1 ½	615	-	216	241	-	-	315	114
MTX 18-60 3~	Rp 2	Rp 1 ½	652	-	253.5	241	-	-	352.5	114

Figure 2

Type	H	H1	W1	W2	M1	N1	N2	S1
MTX 18-30 1~	90	190	125	155	30	140	170	9
MTX 18-40 3~	90	190	125	155	30	140	170	9
MTX 18-50 3~	100	200	140	170	35	160	192	11
MTX 18-60 3~	100	200	140	170	35	160	192	11

Missing dimensions can be taken from the table “Figure 1”.

Pump controls

Product overview

Pump controls SPR-I
Performance: 0.75 kW to 7.50 kW
Page 96

Pump controls SPR-E
Performance: 0.75 kW to 30 kW
Page 98

Pump controls SPR-H
Performance: 0.75 kW to 45 kW, 1 to 6 pumps
Page 100

SPR-I

Pump control

Field of application
– Water supply
– Cooling circuit
– Irrigation
– Industrial applications

Design
The pump is adjusted to the system perfectly with the SPR-I speed control. The pump control is available with the following types of control:
– constant pressure control
– temperature control
– level control
– vacuum control

The SPR-I speed control can be adapted directly on the motor (only with IN-VB pumps).
The speed controls are equipped with a clear text display, PTC thermistor connection and keyboard. The system is parameterised in the factory.

Type key
SPR-I-030

SPR .....SPECK pump control
I .....adapted motor
030 .....kW performance

Technical data
– Performance range: 0.75 kW - 45.00 kW
– Freely programmable pump control with keyboard and backlit clear text display
– Display for all operating messages, nominal values and commissioning values
– Two digital inputs for the start command, reset, manual operation, switching between nominal values, float switch etc.
– Two adjustable relay outputs for error, operation, lack of water, sensor failure etc.
– Speed control system for 1 pump
– Password protection
– Connection for 4-20 mA/0-10 V sensors
– Adjustable PI control for fast pressure control
– Adjustable zero volume switch-off system to switch the pump into “standby” mode
– Manual operation with adjustable constant speed for emergency supply if the sensors fail
– Adjustable electronic dry run protection
– Adjustable electronic pressure monitoring
– Sensor monitoring with emergency switch to constant speed
– Adjustable type of sensor operation
– Adjustable motor characteristics
– Temperature dependent fan control
– IP 66 aluminium housing
– PM mode for IE4 motors
– Fault log for 5 faults
– Operating hours meter, status meter

SPR-I

Technical data

Type	Max. performance (kW) 3~ 400 V	Max. potential motor rated current (A)	Dimensions L x B x H	Approx. weight (kg)
SPR-I-007	0.75	2.00	266 x 186 x 180	4.60
SPR-I-015	1.10	4.00	266 x 186 x 180	4.60
SPR-I-015	1.50	4.00	266 x 186 x 180	4.60
SPR-I-022	2.20	6.50	266 x 186 x 180	4.70
SPR-I-030	3.00	7.00	266 x 186 x 180	5.70
SPR-I-040	4.00	9.00	266 x 186 x 180	5.70
SPR-I-055	5.50	12.00	325 x 215 x 190	7.70
SPR-I-075	7.50	17.00	325 x 215 x 190	7.90

Order information

Type	Article no.	Approx. weight (kg)	Net RRP	Gross RRP
SPR-I-007, 0.75 kW	560.6100.717		**1,256.30 €**	1.495.00 €
SPR-I-015, 1.10 kW	560.6101.117		**1,403.36 €**	1.670.00 €
SPR-I-015, 1.50 kW	560.6101.517		**1,403.36 €**	1.670.00 €
SPR-I-022, 2.20 kW	560.6102.217		**1,493.28 €**	1.777.00 €
SPR-I-030, 3.00 kW	560.6103.017		**1,697.48 €**	2.020.00 €
SPR-I-040, 4.00 kW	560.6104.017		**1,932.77 €**	2.300.00 €
SPR-I-055, 5.50 kW	560.6105.517		**2,147.90 €**	2.556.00 €
SPR-I-075, 7.50 kW	560.6107.517		**2,561.34 €**	3.048.00 €
Accessories				
Pressure sensor 0 - 16 bar, G ¼, 4 - 20 mA	500.8500.016	0.20	**155.46 €**	185.00 €
Pressure sensor 0 - 25 bar, G ¼, 4 - 20 mA	500.8500.025	0.20	**184.87 €**	220.00 €
Pressure sensor 0 - 40 bar, G ¼, 4 - 20 mA	500.8500.019	0.20	**257.14 €**	306.00 €
Vacuum sensor -1 - 0 bar, G ¼, 0 - 10 V	391.8380.168	0.20	**306.75 €**	365.00 €
Temperature sensor 0 - 60 °C, G ¼, 4 - 20 mA	500.8500.017	0.20	**257.98 €**	307.00 €
Sensor cable 2 m, with plug	500.8500.102	0.10	**35.88 €**	42.70 €
Sensor cable 5 m, with plug	500.8500.105	0.30	**47.82 €**	56.90 €
Sensor cable 10 m, with plug	500.8500.110	0.50	**65.29 €**	77.70 €
Sensor cable 30 m, with plug	500.8500.130	1.30	**200.00 €**	238.00 €
Submersible pressure sensor 0 - 0.4 bar, 4 - 20 mA, 15 m cable	500.8500.029	1.00	**715.13 €**	851.00 €
Submersible pressure sensor 0 - 0.4 bar, 4 - 20 mA, 30 m cable	500.8500.028	1.80	**817.65 €**	973.00 €
3 m extension cable for display	560.6900.005	0.30	**31.68 €**	37.70 €

SPR-E

Pump control

Field of application
– Water supply
– Cooling circuit
– Irrigation
– Industrial applications

Design
The pump is adjusted to the system perfectly with the SPR-E speed control. The pump control is available with the following types of control:
– constant pressure control
– temperature control
– level control
– vacuum control

The SPR-E speed control can be assembled in control boxes on site or on the wall. The speed control is available up to 30 kW. Larger kW values available on request.
The speed control is equipped with a clear text display, PTC thermistor connection, operation selection buttons, repair switch and interface relays. The system is parameterised in the factory.

Type key
SPR-E-030
SPR .....pump control
E .....external control box
030 .....kW performance

Technical data
– Performance range: 0.75 kW - 45.00 kW
– Freely programmable pump control with keyboard and backlit clear text display
– Display for all operating messages, nominal values and commissioning values
– Two digital inputs for the start command, reset, manual operation, switching between nominal values, float switch etc.
– adjustable relay outputs for error, operation, lack of water, sensor failure etc.
– Speed control system for 1 pump
– Password protection
– Connection for 4-20 mA/0-10 V sensors
– Adjustable PI control for fast pressure control
– Adjustable zero volume switch-off system to switch the pump into “standby” mode
– Manual operation with adjustable constant speed for emergency supply if the sensors fail
– Adjustable electronic dry run protection
– Adjustable electronic pressure monitoring
– Sensor monitoring with emergency switch to constant speed
– Adjustable type of sensor operation
– Adjustable motor characteristics
– Temperature dependent fan control
– IP 66 aluminium housing
– PM mode for IE4 motors
– Fault log for 5 faults
– Operating hours meter, status meter
– Interface: RS 485 Modbus Slave
– Interface relay for ON/OFF via on site irrigation device (optional setpoint switching, 2 setpoints)

SPR-E

Technical data

Type	Max. performance (kW) 3~ 400 V	Max. potential motor rated current (A)	Dimensions H x B x T	Approx. weight (kg)
SPR-E-007	0.75	2.00	417 x 203 x 230	12.20
SPR-E-015	1.50	4.00	417 x 203 x 230	12.20
SPR-E-022	2.20	6.50	417 x 203 x 230	12.20
SPR-E-030	3.00	7.00	417 x 203 x 230	12.80
SPR-E-040	4.00	9.00	417 x 203 x 230	14.30
SPR-E-055	5.50	12.00	417 x 246 x 230	14.30
SPR-E-075	7.50	17.00	417 x 246 x 230	14.30
SPR-E-110	11.00	23.00	417 x 246 x 230	20.50
SPR-E-150	15.00	32.00	417 x 246 x 230	20.50
SPR-E-185	18.50	38.00	417 x 246 x 230	30.00
SPR-E-220	22.00	44.00	417 x 246 x 230	30.50
SPR-E-300	30.00	60.00	417 x 246 x 230	31.50

Order information

Type	Article no.	Approx. weight (kg)	Net RRP	Gross RRP
SPR-E-007, 0.75 kW	560.6100.731		**1,328.57 €**	1,581.00 €
SPR-E-015, 1.50 kW	560.6101.531		**1,328.57 €**	1,581.00 €
SPR-E-022, 2.20 kW	5601022.231		**1,399.16 €**	1,665.00 €
SPR-E-030, 3.00 kW	560.6103.031		**1,585.71 €**	1,887.00 €
SPR-E-040, 4.00 kW	560.6104.031		**1,699.16 €**	2,022.00 €
SPR-E-055, 5.50 kW	560.6105.531		**2,047.06 €**	2,436.00 €
SPR-E-075, 7.50 kW	560.6107.531		**2,268.07 €**	2,699.00 €
SPR-E-110, 11.00 kW	560.6111.031		**2,528.57 €**	3,009.00 €
SPR-E-150, 15.00 kW	560.6115.031		**2,975.63 €**	3,541.00 €
SPR-E-185, 18.50 kW	560.6118.531		**4,425.21 €**	5,266.00 €
SPR-E-220, 22.00 kW	560.6122.031		**5,017.65 €**	5,971.00 €
SPR-E-300, 30.00 kW	560.6130.031		**5,321.01 €**	6,332.00 €
Accessories				
Pressure sensor 0 - 16 bar, G ¼, 4 - 20 mA	500.8500.016	0.20	**155.46 €**	185.00 €
Pressure sensor 0 - 25 bar, G ¼, 4 - 20 mA	500.8500.025	0.20	**184.87 €**	220.00 €
Pressure sensor 0 - 40 bar, G ¼, 4 - 20 mA	500.8500.019	0.20	**257.14 €**	306.00 €
Vacuum sensor -1 - 0 bar, G ¼, 0 - 10 V	391.8380.168	0.20	**306.75 €**	365.00 €
Temperature sensor 0 - 60 °C, G ¼, 4 - 20 mA	500.8500.017	0.20	**257.98 €**	307.00 €
Sensor cable 2 m, with plug	500.8500.102	0.10	**35.88 €**	42.70 €
Sensor cable 5 m, with plug	500.8500.105	0.30	**47.82 €**	56.91 €
Sensor cable 10 m, with plug	500.8500.110	0.50	**65.29 €**	77.70 €
Sensor cable 30 m, with plug	500.8500.130	1.30	**200.00 €**	238.00 €
Submersible pressure sensor 0 - 0.4 bar, 4 - 20 mA, 15 m cable	500.8500.029	1.00	**715.13 €**	851.00 €
Submersible pressure sensor 0 - 0.4 bar, 4 - 20 mA, 30 m cable	500.8500.028	1.80	**817.65 €**	973.00 €
3m extension cable for display	560.6900.005	0.30	**31.68 €**	37.70 €

SPR-H

Pump control

Field of application
– Water supply
– Cooling circuit
– Irrigation
– Industrial applications

Design
The pump is adjusted to the system perfectly with the SPR-H speed control. The pump control is available with the following types of control:
– constant pressure control
– temperature control
– level control
– vacuum control

The SPR-H speed control is delivered as an IP 54 steel enclosed control box.
The speed control is equipped with a clear text display, keyboard, main switch and motor protection. The system is parameterised in the factory. Fuses for each pump, manual-0-automatic switch for each pump PTC thermistor connection.

Type key
SPR-H-0220-3

SPR .....SPECK pump control
H .....external control box
0220 .....kW performance
3.....number of frequency converters

Special editions
– Remote adjustment
– Remote monitoring via GSM module
– Water meter
– Water level control/feed

Technical data
– Performance range: 0.75 kW - 45.00 kW
– Freely programmable pump control with keyboard and backlit clear text display
– Display for all operating messages, nominal values and commissioning values
– Four digital inputs for the start command, reset, manual operation, switching between nominal values, float switch etc.
– Speed control system for 1 to 6 pumps
– Triple password protection
– Connection for two 4-20 mA/0-10 V sensors
– Adjustable PI control for fast pressure control
– Adjustable zero volume switch-off system to switch the pump into “standby” mode
– Safe start function to fill pipework following a power cut
– Manual operation with adjustable constant speed for emergency supply if the sensors fail
– Guard for operation with submersible pumps
– Adjustable run time monitoring
– Adjustable leak monitoring
– Adjustable pressure reduction
– Adjustable electronic dry run protection
– Adjustable electronic pressure monitoring
– Sensor monitoring with emergency switch to constant speed
– Multi operation with base/peak load operation, automatic fault changeover and pump changeover function
– Adjustable type of sensor operation
– Adjustable test run
– Adjustable motor characteristics
– Real time clock with 16 fault logs with time stamp and operating hours meter
– Interface: RS 232 Slave/GSM2 and RS 485 ModBus Slave
– Large steel sheet control box IP54 (SPR-H)
– Temperature dependent fan control (depending on motor capactiy) passive fan < 5.4 kW, active fan > 5.5 kW
– Lockable front switch, fuses
– Separate power pack with optional double power pack
– Low leakage current filter C1 installed
– PTC thermistor connection, as standard
– SD card for data collection, as standard

SPR-H

Technical data

Type	Max. performance (kW) 3~ 400 V)	Max. potential motor rated current (A)	Dimensions H x B x T	Approx. weight (kg)
For units with 1 pump				
SPR-H-0007-1	0.75	2.00	600 x 400 x 260	35.00
SPR-H-0015-1	1.50	4.00	600 x 400 x 260	35.00
SPR-H-0022-1	2.20	6.50	600 x 400 x 260	38.00
SPR-H-0030-1	3.00	7.00	600 x 400 x 260	39.00
SPR-H-0040-1	4.00	9.00	700 x 500 x 260	40.00
SPR-H-0055-1	5.50	12.00	700 x 500 x 260	55.00
SPR-H-0075-1	7.50	17.00	700 x 500 x 260	60.00
SPR-H-0110-1	11.00	23.00	800 x 600 x 300	65.00
SPR-H-0150-1	15.00	32.00	800 x 600 x 300	70.00
SPR-H-0185-1	18.50	38.00	1000 x 600 x 300	85.00
SPR-H-0220-1	22.00	44.00	1000 x 600 x 300	90.00
SPR-H-0300-1	30.00	60.00	1000 x 600 x 300	95.00
SPR-H-0370-1	37.00	75.00	1200 x 800 x 400	150.00
SPR-H-0450-1	45.00	90.00	1200 x 800 x 400	175.00
For units with 2 pumps				
SPR-H-0007-2	0.75	2.00	700 x 500 x 260	65.00
SPR-H-0015-2	1.50	4.00	700 x 500 x 260	66.00
SPR-H-0022-2	2.20	6.50	700 x 500 x 260	75.00
SPR-H-0030-2	3.00	7.00	700 x 500 x 260	79.00
SPR-H-0040-2	4.00	9.00	700 x 500 x 260	80.00
SPR-H-0055-2	5.50	12.00	700 x 500 x 260	95.00
SPR-H-0075-2	7.50	17.00	700 x 500 x 260	105.00
SPR-H-0110-2	11.00	23.00	800 x 800 x 300	110.00
SPR-H-0150-2	15.00	32.00	800 x 800 x 300	130.00
SPR-H-0185-2	18.50	38.00	1000 x 1000 x 300	160.00
SPR-H-0220-2	22.00	44.00	1000 x 1000 x 300	165.00
SPR-H-0300-2	30.00	60.00	1000 x 1000 x 300	170.00
SPR-H-0370-2	37.00	75.00	standing cabinet	280.00
SPR-H-0450-2	45.00	90.00	standing cabinet	330.00
For units with 3 pumps				
SPR-H-0007-3	0.75	2.00	700 x 500 x 260	94.00
SPR-H-0015-3	1.50	4.00	700 x 500 x 260	95.00
SPR-H-0022-3	2.20	6.50	700 x 500 x 260	98.00
SPR-H-0030-3	3.00	7.00	700 x 500 x 260	105.00
SPR-H-0040-3	4.00	9.00	800 x 600 x 300	110.00
SPR-H-0055-3	5.50	12.00	800 x 600 x 300	140.00
SPR-H-0075-3	7.50	17.00	800 x 600 x 300	160.00
SPR-H-0110-3	11.00	23.00	1000 x 1000 x 300	180.00
SPR-H-0150-3	15.00	32.00	1000 x 1000 x 300	235.00
SPR-H-0185-3	18.50	37.00	1200 x 1200 x 300	255.00
SPR-H-0220-3	22.00	44.00	1200 x 1200 x 300	290.00
SPR-H-0300-3	30.00	60.00	standing cabinet	310.00
SPR-H-0370-3	37.00	75.00	standing cabinet	445.00
SPR-H-0450-3	45.00	90.00	standing cabinet	520.00

SPR-H

Order information

Type	Article no.	Net RRP	Gross RRP
For units with 1 pump			
SPR-H-0007-1	560.6100.710	2,553.78 €	3,039.00 €
SPR-H-0015-1	560.6101.511	2,837.82 €	3,377.00 €
SPR-H-0022-1	560.6102.210	3,312.61 €	3,942.00 €
SPR-H-0030-1	560.6103.010	3,585.71 €	4,267.00 €
SPR-H-0040-1	560.6104.010	3,845.38 €	4,576.00 €
SPR-H-0055-1	560.6105.510	4,388.24 €	5,222.01 €
SPR-H-0075-1	560.6107.510	4,722.69 €	5,620.00 €
SPR-H-0110-1	560.6111.010	5,021.01 €	5,975.00 €
SPR-H-0150-1	560.6115.010	6,146.22 €	7,314.00 €
SPR-H-0185-1	560.6118.510	7,484.87 €	8,907.00 €
SPR-H-0220-1	560.6122.010	8,376.47 €	9,968.00 €
SPR-H-0300-1	560.6130.010	10,171.43 €	12,104.00 €
SPR-H-0370-1	560.6137.010	13,068.07 €	15,551.00 €
SPR-H-0450-1	560.6145.010	16,678.15 €	19,847.00 €
For units with 2 pumps			
SPR-H-0007-2	560.6200.710	4,176.47 €	4,970.00 €
SPR-H-0015-2	560.6201.510	4,642.86 €	5,525.00 €
SPR-H-0022-2	560.6202.210	5,452.10 €	6,488.00 €
SPR-H-0030-2	560.6203.010	5,936.13 €	7,064.00 €
SPR-H-0040-2	560.6204.010	6,411.76 €	7,630.00 €
SPR-H-0055-2	560.6205.510	7,372.27 €	8,773.00 €
SPR-H-0075-2	560.6207.510	8,236.97 €	9,802.00 €
SPR-H-0110-2	560.6211.010	8,742.02 €	10,403.00 €
SPR-H-0150-2	560.6215.010	10,246.22 €	12,193.00 €
SPR-H-0185-2	560.6218.510	12,478.15 €	14,849.00 €
SPR-H-0220-2	560.6222.010	13,966.39 €	16,620.00 €
SPR-H-0300-2	560.6230.010	16,955.46 €	20,177.00 €
SPR-H-0370-2	560.6237.010	21,782.35 €	25,921.00 €
SPR-H-0450-2	560.6245.010	27,803.36 €	33,086.00 €
For units with 3 pumps			
SPR-H-0007-3	560.6300.710	5,241.18 €	6,237.00 €
SPR-H-0015-3	560.6301.510	5,825.21 €	6,932.00 €
SPR-H-0022-3	560.6302.210	7,027.73 €	8,363.00 €
SPR-H-0030-3	560.6303.010	7,642.02 €	9,094.00 €
SPR-H-0040-3	560.6304.010	8,231.93 €	9,796.00 €
SPR-H-0055-3	560.6305.510	10,268.91 €	12,220.00 €
SPR-H-0075-3	560.6307.511	11,689.08 €	13,910.00 €
SPR-H-0110-3	560.6311.010	14,006.72 €	16,668.00 €
SPR-H-0150-3	560.6315.010	15,069.75 €	17,933.00 €
SPR-H-0185-3	560.6318.510	18,347.90 €	21,834.00 €
SPR-H-0220-3	560.6322.010	20,938.66 €	24,917.00 €
SPR-H-0300-3	560.6330.010	24,936.97 €	29,675.00 €
SPR-H-0370-3	560.6337.010	32,657.14 €	38,862.00 €
SPR-H-0450-3	560.6345.010	41,678.15 €	49,597.00 €

SPR-H

Accessories

Type	Article no.	Approx. weight (kg)	Net RRP	Gross RRP
Pressure sensor 0 - 16 bar, G ¼, 4-20 mA	500.8500.016	0.20	155.46 €	185.00 €
Pressure sensor 0 - 25 bar, G ¼, 4-20 mA	500.8500.025	0.20	184.87 €	220.00 €
Pressure sensor 0 - 40 bar, G ¼, 4-20 mA	500.8500.019	0.20	257.14 €	306.00 €
Vacuum sensor -1 - 0 bar, G ¼, 0-10 V	391.8380.168	0.20	306.75 €	365.00 €
Temperature sensor 0 - 60 °C, G ¼, 4-20 mA	500.8500.017	0.20	257.98 €	307.00 €
Sensor cable 2 m, with plug	500.8500.102	0.10	35.88 €	42.70 €
Sensor cable 5 m, with plug	500.8500.105	0.30	47.82 €	56.90 €
Sensor cable 10 m, with plug	500.8500.110	0.50	65.29 €	77.70 €
Sensor cable 30 m, with plug	500.8500.130	1.30	200.00 €	238.00 €
Submersible pressure sensor 0 - 0.4 bar, 4 - 20 mA, 15 m cable	500.8500.029	1.00	715.13 €	851.00 €
Submersible pressure sensor 0 - 0.4 bar, 4 - 20 mA, 30 m cable	500.8500.028	1.80	817.65 €	973.00 €
Supplements				
Sine wave filter up to 1.50 kW, 4 A, per pump	560.6902.015		650.42 €	774.00 €
Sine wave filter up to 4.00 kW, 10 A, per pump	560.6902.040		810.08 €	964.00 €
Sine wave filter up to 7.50 kW, 17 A, per pump	560.6902.075		1,008.40 €	1,200.00 €
Sine wave filter up to 11.00 kW, 23,50 A, per pump	560.6902.110		1,213.44 €	1,444.00 €
Sine wave filter up to 15.00 kW, 32 A, per pump	560.6902.150		1,512.60 €	1,800.00 €
Sine wave filter up to 18.50 kW, 37 A, per pump	560.6902.185		1,648.74 €	1,962.00 €
Sine wave filter up to 22.00 kW, 48 A, per pump	560.6902.220		1,902.52 €	2,264.00 €
Sine wave filter up to 30.00 kW, 61 A, per pump	560.6902.300		2,182.35 €	2,597.00 €
Sine wave filter up to 37.00 kW, 72 A, per pump	560.6902.370		2,500.84 €	2,976.00 €
Sine wave filter up to 45.00 kW, 90 A, per pump	560.6902.450		3,023.53 €	3,598.00 €
Integrated GSM modem (terminal/antenne/3.5 m cable)	560.6901.000		680.67 €	810.00 €
Lamp display per function	560.6901.001		75.63 €	90.00 €
Control box lighting/socket	560.6901.002		235.29 €	280.00 €
2/4 nominal value selection switch per control	560.6901.003		105.04 €	125.00 €
Built in potentiometer IP 66 to set the speed	560.6901.004		131.93 €	157.00 €
Relay 24 V AC per irrigation control device	560.6901.005		104.20 €	124.00 €
Control box heating 10/20 W, 230 V	560.6901.006		235.29 €	280.00 €
Active fan per control 1.5 - 5.4 kW (from 5.5 kW series)	569.9900.011		306.72 €	365.00 €
Emergency stop button 16 - 125 A per control	560.6901.007		235.29 €	280.00 €
Ground fault circuit interrupter 40/0,3 type B, selective	560.6901.008		1,160.50 €	1,381.00 €
Ground fault circuit interrupter 63/0,3 type B, selective	560.6901.009		1,635.29 €	1,946.00 €
Feed function via submerged pressure transmitter	560.6901.010		417.64 €	497.00 €
Electrode relay for dry running protection, via electrodes	560.6901.011		200.84 €	239.00 €
Actual pressure module/signal converter 230 V	560.6901.012		303.36 €	361.00 €
Overvoltage/lightning protection module	560.6901.013		1,865.54 €	2,220.00 €
Air conditioner heating + cooling	560.6901.014		3,522.69 €	4,192.00 €
Feed function via floating toggle switch	560.6901.015		466.38 €	555.00 €

Water extraction

Product overview

SUPS Borehole pumps
Performance: up to 80 m³/h
Page 106

Water extraction accessories
Page 135

PM Piston pumps + domestic waterwork pumps
Performance: up to 3 m³/h
Page 148

BS Piston pumps + domestic waterwork pumps
Performance: up to 5 m³/h
Page 152

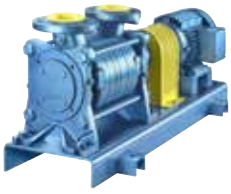

SKG Side channel pumps
Performance: up to 7.5 m³/h
Page 156

SUPS 3

Borehole pumps

Field of application
– Water supply
– Irrigation
– Rainwater utilisaton
– Groundwater reduction

Design
Borehole pumps complete with single phase motor 1~ 140 Hz, 8200 rpm at frequency controlled operation, including motor protection, non-return valve and underwater cable with shock-proof plug.
– Integrated dry run protection
– Smooth start
– Protection against over and under voltage
– Max. diameter 76 mm

Motor
Protection class ..... IP 68
Class of insulation ..... B
Voltage ..... 1~ 230 V ± 10 %
Start type ..... smooth start
Motor speed ..... 8200 rpm (at 140 Hz)
Frequency ..... 50 Hz

Technical data
Flow rate ..... Q up to max. 7 m³/h
Total dynamic head ..... H up to max. 105 mWs
Fluid temperature ..... t up to max. 30 °C
Sand content ..... up to max. 150 g/m³

Pumped fluid
Pure, cold water.

Materials used
Pump housing ..... stainless steel AISI 304
Stages/impellers ..... stainless steel AISI 304
Shaft ..... stainless steel AISI 304
Coupling ..... stainless steel AISI 304
Wear ring ..... NBR
Bearings/intermediate bearings ..... NBR
Strainer ..... stainless steel AISI 304
Drinking water cable ..... 3 x 1.5 mm²

Type key
SUPS 3-2-40
SUP ..... SPECK borehole pump
S ..... stainless steel design
3 ..... pump type 3“
2 ..... Flow rate in m³/h
40 ..... Total dynamic head in mWs

Irrigation package
Consisting of SUPS 3 borehole pump with 20 or 30 m underwater cable and shockproof plug, 10 cable clamps, Speckmat 1 switching device and 18 l diaphragm pressure vessel, PN 10.

SUPS 3

Characteristics

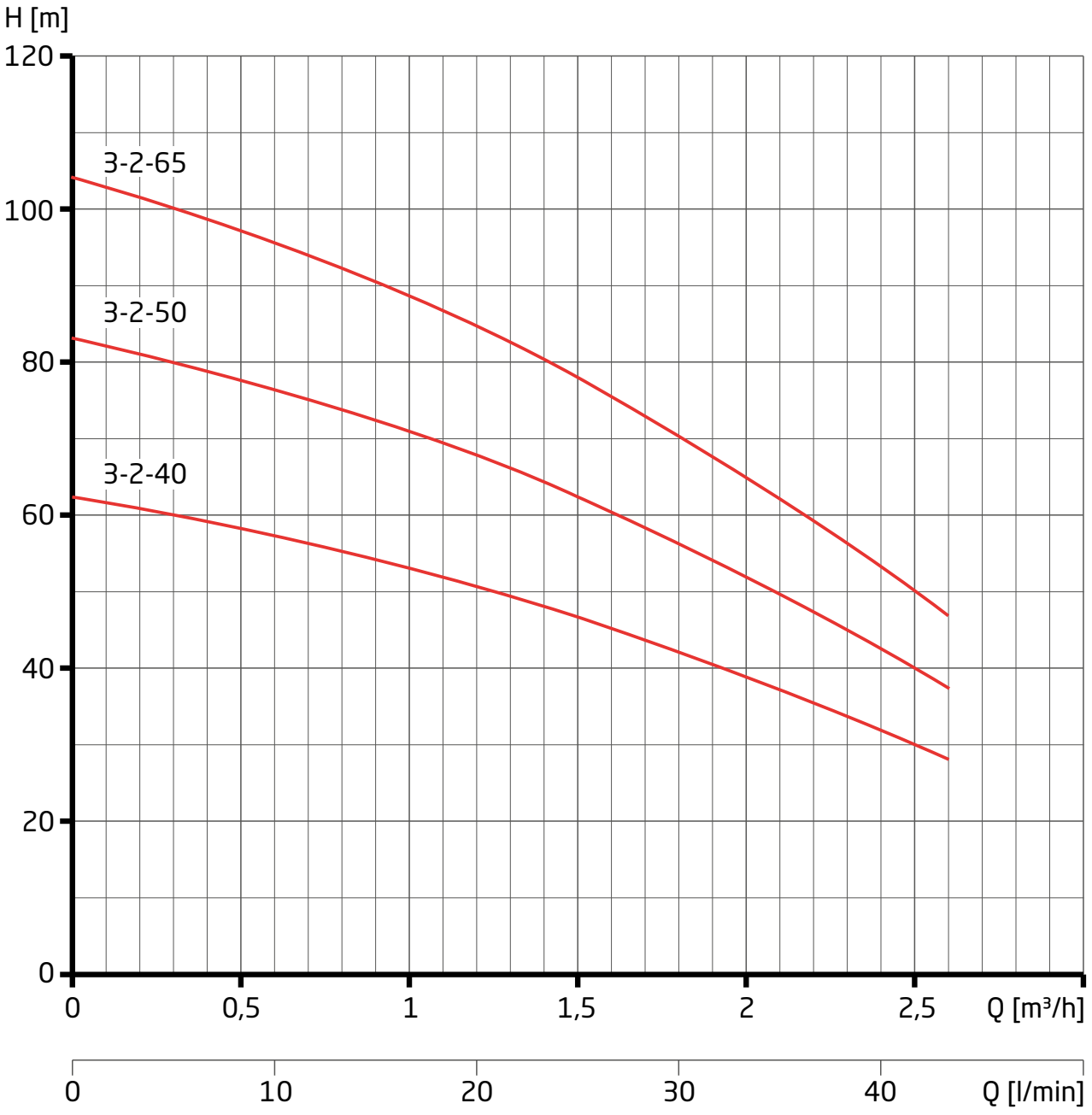

SUPS 3

Characteristics

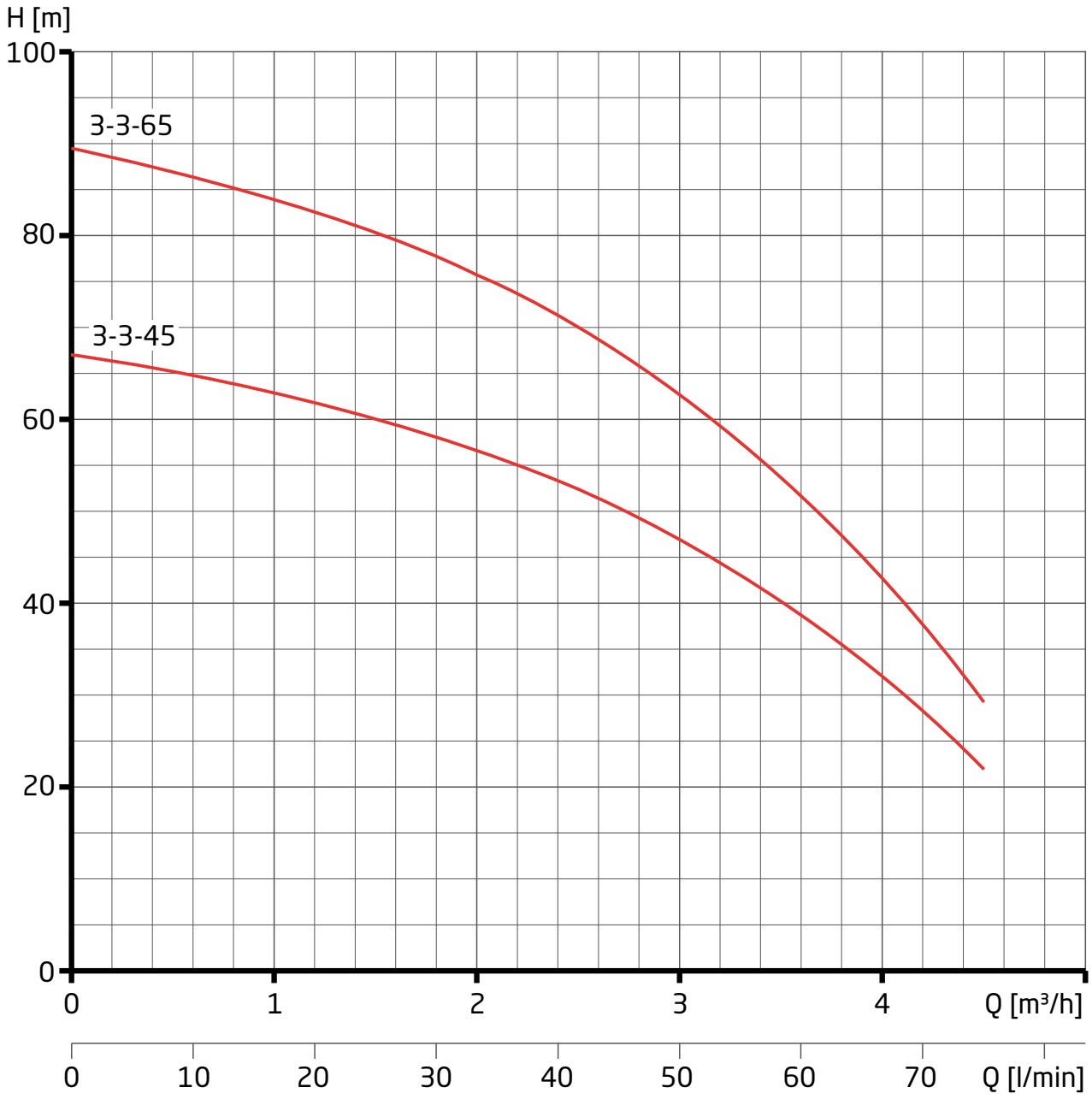

SUPS 3

Characteristics

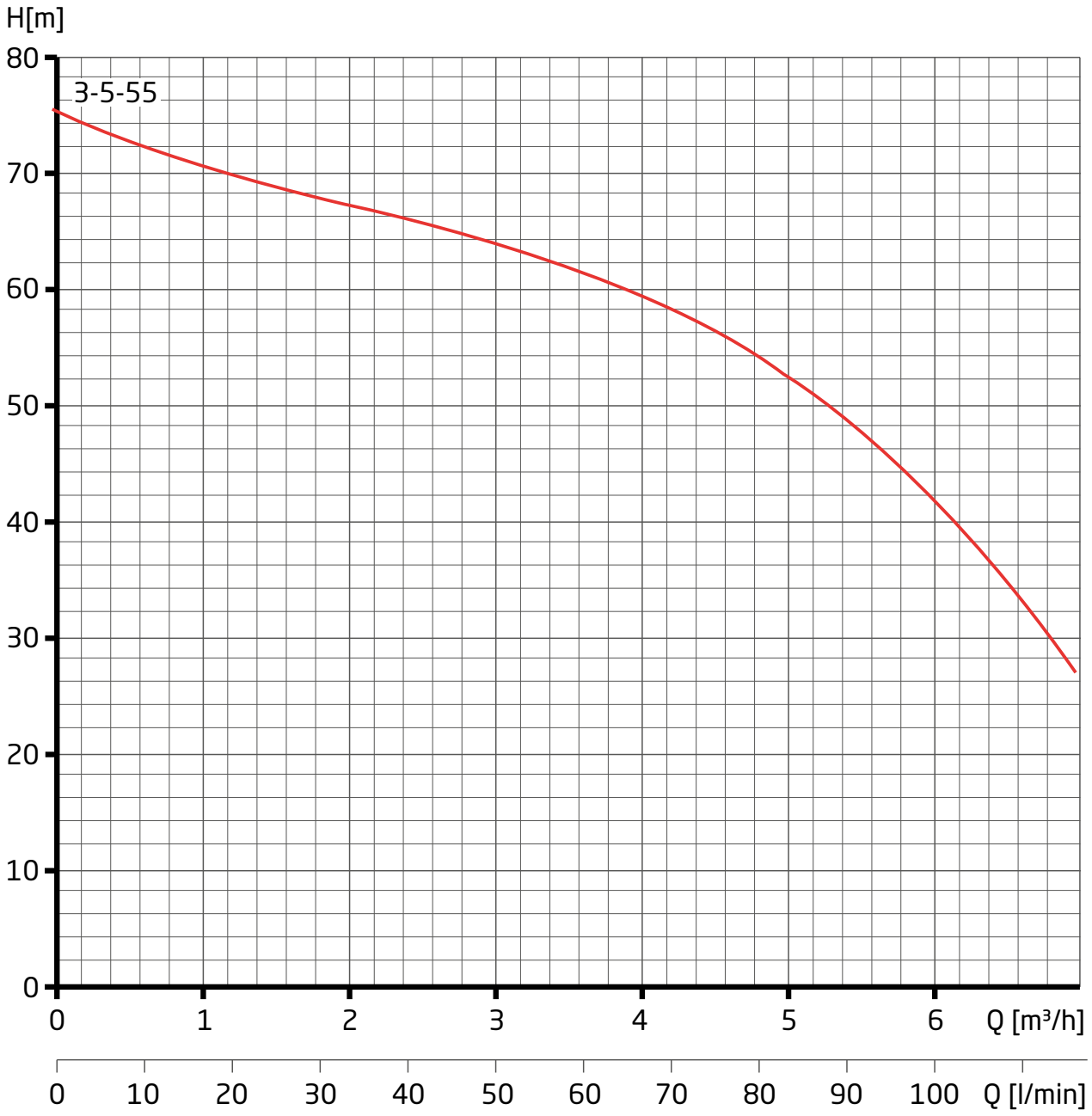

SUPS 3

Technical data

Type	Cable length (m)	Pipe connection (Rp)	Power output P_2 (kW)	Rated current (A) 1~ 230 V	Weight (kg)
SUPS 3-2-40	20	1 ¼	0.60	5.80	14.00
SUPS 3-2-50	30	1 ¼	0.90	8.20	15.50
SUPS 3-2-65	30	1 ¼	0.90	8.20	15.50
SUPS 3-3-45	30	1 ¼	0.90	8.20	16.00
SUPS 3-3-65	30	1 ¼	1.50	12.20	16.50
SUPS 3-5-55	30	1 ¼	1.50	12.20	16.50

Type	Cable length (m)	Power output P_2 (kW)	Weight (kg)
Irrigation package SUPS 3-2-40	20	0.60	21.00
Irrigation package SUPS 3-3-45	30	0.90	23.00

Order information

Type	Article no.	Net RRP	Gross RRP
SUPS 3-2-40, mit 20 m Kabel	518.1302.408	**970.59 €**	1,155.00 €
SUPS 3-2-50, mit 30 m Kabel	518.1302.508	**1,047.06 €**	1,246.00 €
SUPS 3-2-65, mit 30 m Kabel	518.1302.658	**1,137.82 €**	1,354.00 €
SUPS 3-3-45, mit 30 m Kabel	518.1303.456	**1,048.74 €**	1,248.00 €
SUPS 3-3-65, mit 30 m Kabel	518.1303.658	**1,106.72 €**	1,317.00 €
SUPS 3-5-55, mit 30 m Kabel	518.1305.558	**1,094.96 €**	1,303.00 €

Type	Article no.	Net RRP	Gross RRP
Irrigation package SUPS 3-2-40, with 20 m cable	518.1302.409	**1,236.97 €**	1,472.00 €
Irrigation package SUPS 3-3-45, with 30 m cable	518.1303.457	**1,316.81 €**	1,567.00 €

Type	Article no.	Net RRP	Gross RRP
Irrigation package (individual) up to max. 0.9 kW	518.1300.000	**272.27 €**	324.00 €

SUPS 3

Dimensions

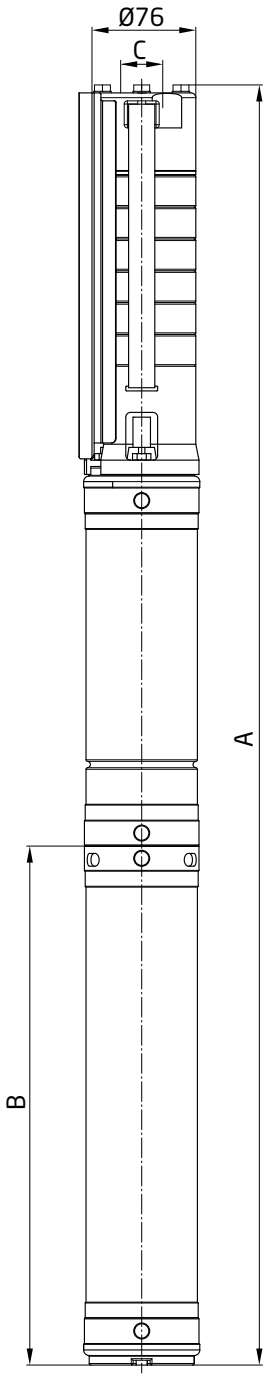

Type	A	B	C
SUPS 3-2-40	1000	800	Rp 1 ¼
SUPS 3-2-50	1050	830	Rp 1 ¼
SUPS 3-2-65	1070	830	Rp 1 ¼
SUPS 3-3-45	1030	830	Rp 1 ¼
SUPS 3-3-65	1080	860	Rp 1 ¼
SUPS 3-5-55	1060	860	Rp 1 ¼

SUPS 4

Borehole pumps

Field of application
– Water supply
– Irrigation
– Fountain units
– Heat pumps
– Rainwater utilisation

Design
Three-phase:
Pump complete with three phase motor 3~ 400V, 50 Hz, 2800 rpm, including non-return valve, without cable connectors.
Single phase:
Pump complete with single-phase motor 1~ 230V, 50 Hz, 2800 rpm, with start-up device, including motor protection switch and non-return valve, without cable connectors

Motor
Protection class ..... IP 68
Class of insulation ..... B
Voltage ..... 1~ 230 V ± 10 %
with start-up device in ISO housing
Voltage ..... 3~ 400 V ± 10 %
Start type ..... direct start
Motor speed ..... 2800 rpm
Frequency ..... 50 Hz

Technical data
Flow rate ..... Q up to max. 8 m³/h
Total dynamic head ..... H up to max. 415 mWs
Fluid temperature ..... t up to max. 30 °C
Sand content ..... up to max. 150 g/m³

Pumped fluid
Pure, cold water.

Materials used
Pump housing ..... stainless steel AISI 304
Stages/impellers ..... stainless steel AISI 304
Shaft ..... stainless steel AISI 304
Coupling ..... stainless steel AISI 304
Wear ring ..... PTFE
Bearings/intermediate bearings ..... NBR
Strainer ..... stainless steel AISI 304

Type key
SUPS 4-3-12
SUP ..... SPECK borehole pump
S ..... stainless steel design
4 ..... pump type 4“
3 ..... pump size
12 ..... number of stages

Special editions
– Special material AISI 316
– Higher fluid temperatures

SUPS 4

Characteristics

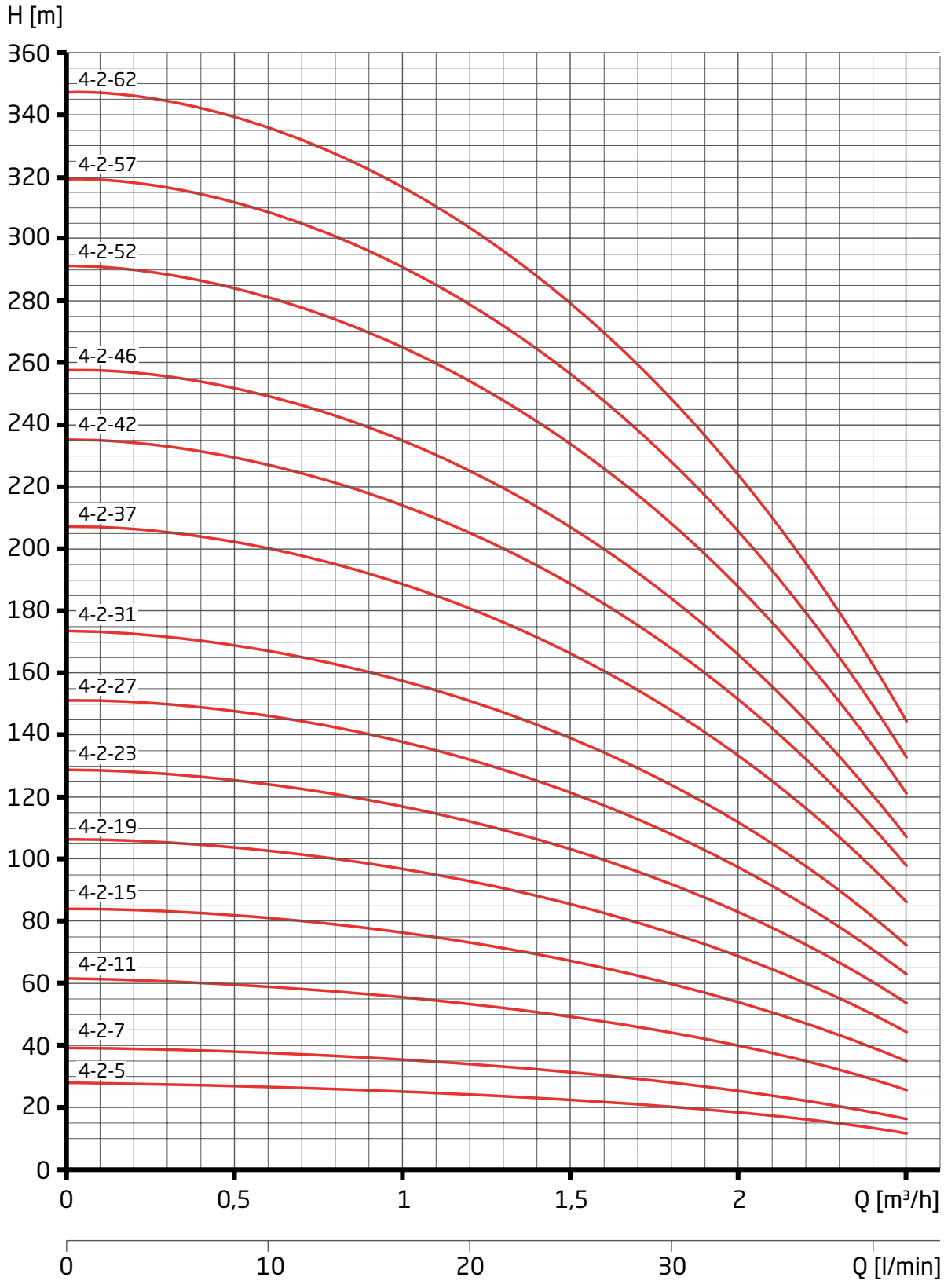

SUPS 4

Characteristics

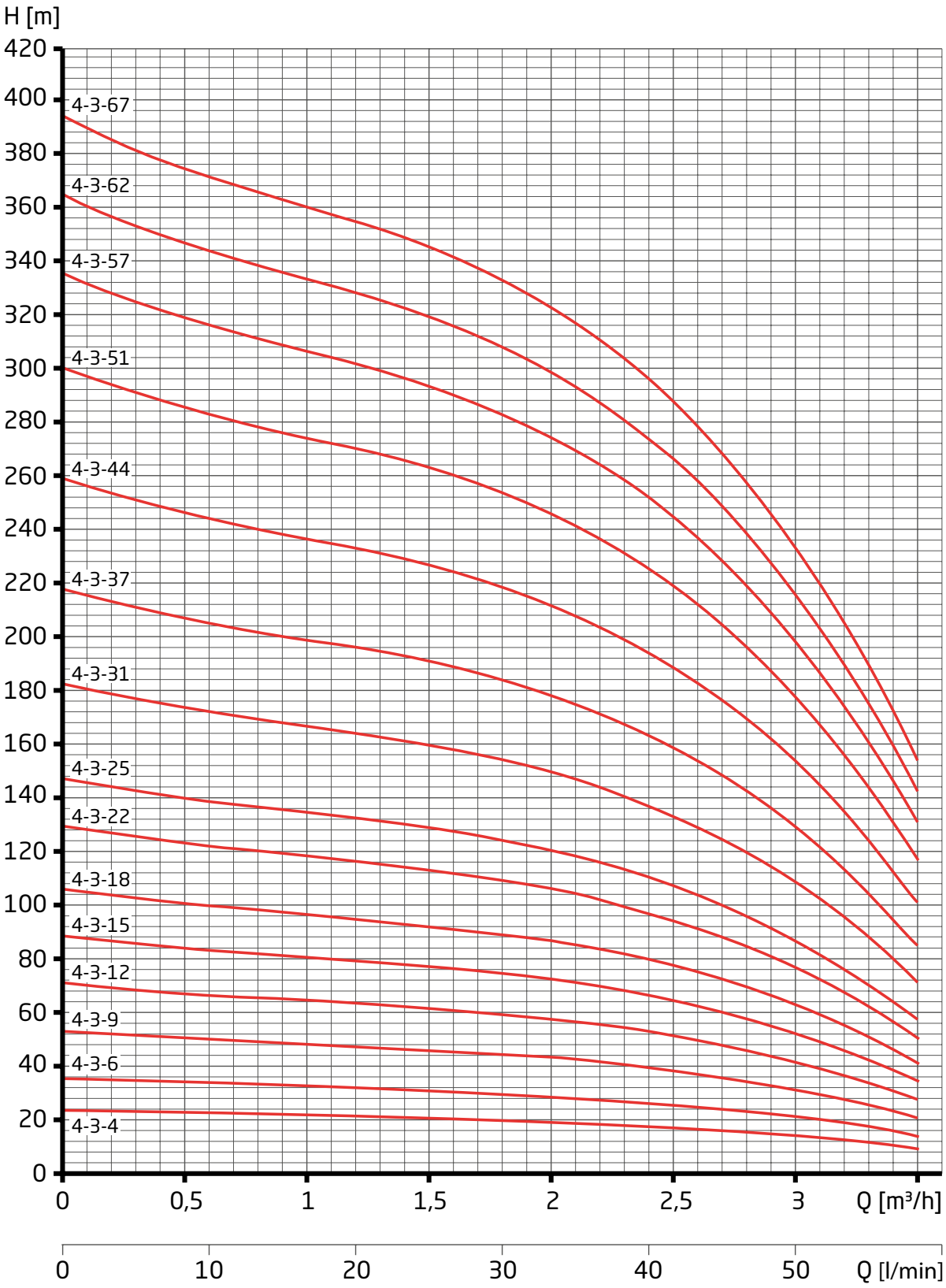

SUPS 4

Characteristics

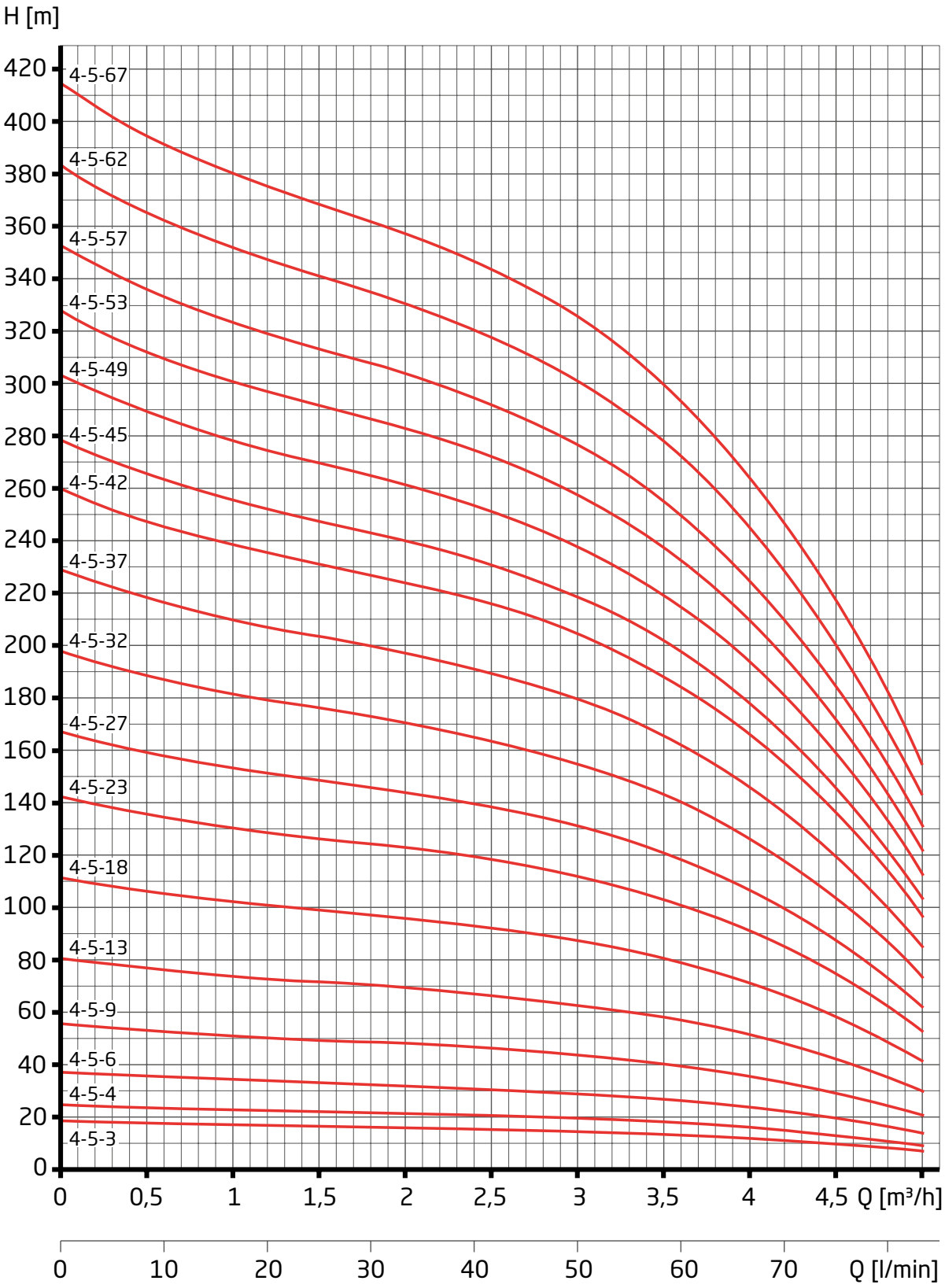

SUPS 4

Characteristics

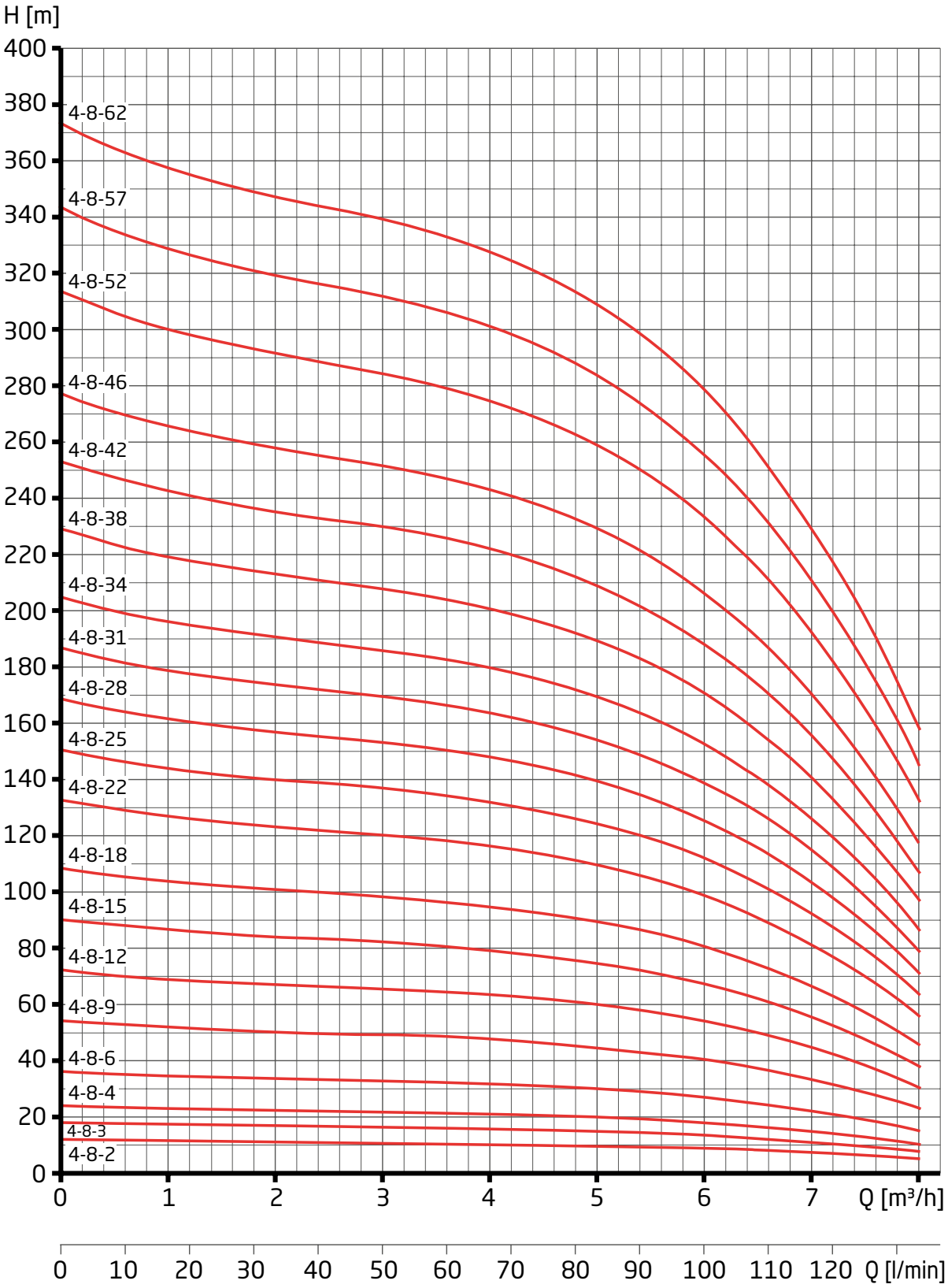

SUPS 4

Characteristics

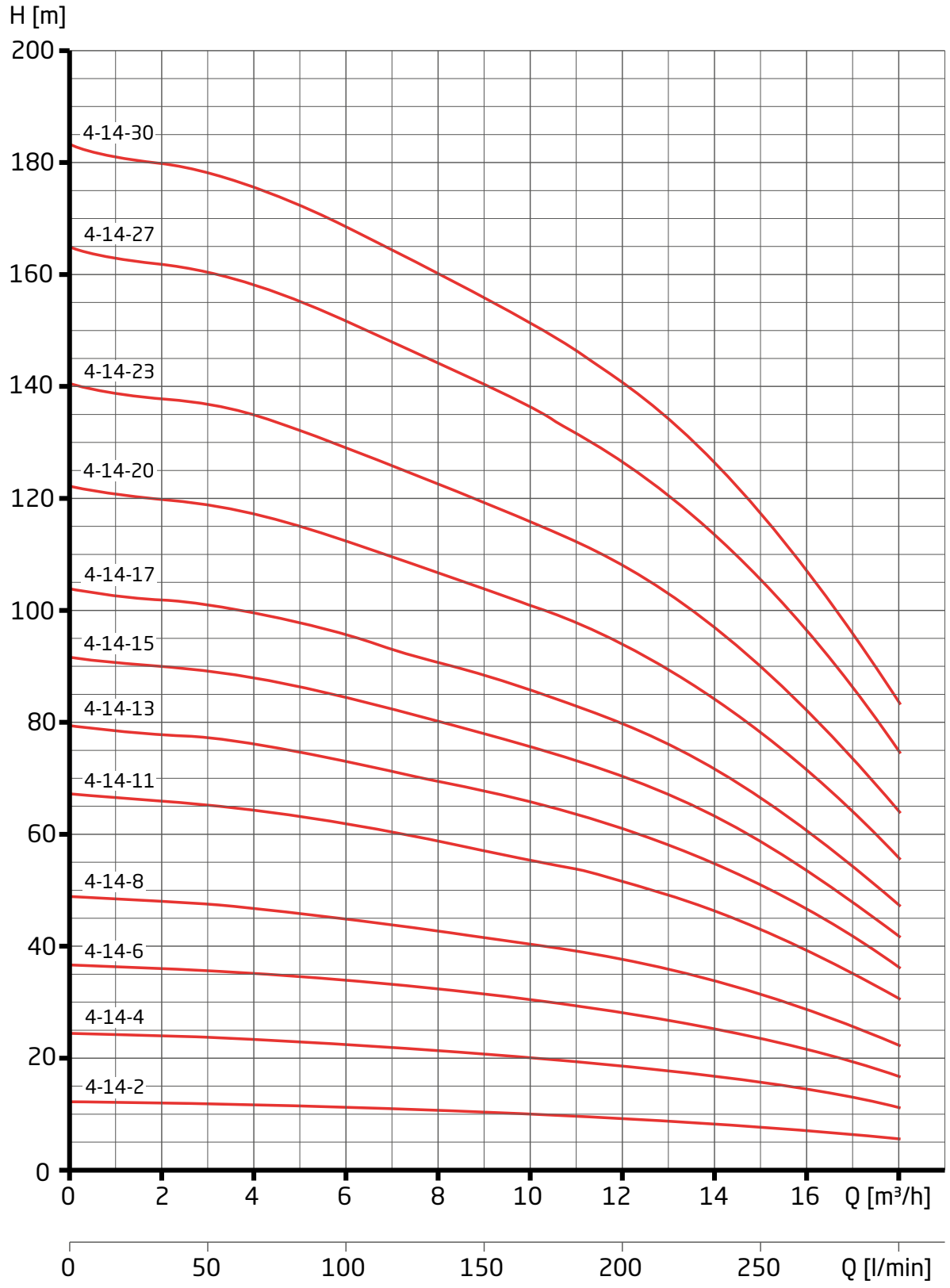

SUPS 4

Technical data

Type	Pipe connection (Rp)	Power output P_2 (kW)	Rated current (A) 3~ 400 V	Rated current (A) 1~ 230 V	Weight (kg) 3~/1~
SUPS 4-2-5	1 ½	0.25	0.68	2.40	8.80/9.80
SUPS 4-2-7	1 ½	0.37	1.10	3.30	9.80/11.40
SUPS 4-2-11	1 ½	0.55	1.60	4.30	11.90/12.70
SUPS 4-2-15	1 ½	0.75	2.00	5.70	14.20/16.20
SUPS 4-2-19	1 ½	1.10	2.80	8.40	16.80/18.70
SUPS 4-2-23	1 ½	1.10	2.80	8.40	18.10/20.00
SUPS 4-2-27	1 ½	1.50	3.90	10.70	20.50/22.80
SUPS 4-2-31	1 ½	1.50	3.90	10.70	21.80/24.10
SUPS 4-2-37	1 ½	2.20	5.50	14.70	25.30/30.90
SUPS 4-2-42	1 ½	2.20	5.50	14.70	27.00/32.60
SUPS 4-2-46	1 ½	2.20	5.50	14.70	28.30/33.90
SUPS 4-2-52	1 ½	3.00	7.50	-	32.80/-
SUPS 4-2-57	1 ½	3.00	7.50	-	34.50/-
SUPS 4-2-62	1 ½	3.00	7.50	-	36.20/-
SUPS 4-3-4	1 ½	0.25	0.68	2.40	8.70/9.70
SUPS 4-3-6	1 ½	0.37	1.10	3.30	9.40/11.00
SUPS 4-3-9	1 ½	0.55	1.60	4.30	11.20/13.20
SUPS 4-3-12	1 ½	0.75	2.00	5.70	13.10/15.10
SUPS 4-3-15	1 ½	1.10	2.80	8.40	15.40/17.30
SUPS 4-3-18	1 ½	1.10	2.80	8.40	16.30/18.20
SUPS 4-3-22	1 ½	1.50	3.90	10.70	18.70/21.00
SUPS 4-3-25	1 ½	1.50	3.90	10.70	19.70/22.00
SUPS 4-3-31	1 ½	2.20	5.50	14.70	23.10/28.70
SUPS 4-3-37	1 ½	2.20	5.50	14.70	25.10/30.70
SUPS 4-3-44	1 ½	3.00	7.50	-	29.90/-
SUPS 4-3-51	1 ½	3.00	7.50	-	32.20/-
SUPS 4-3-57	1 ½	3.70	9.00	-	39.70/-
SUPS 4-3-62	1 ½	3.70	9.00	-	41.30/-
SUPS 4-3-67	1 ½	4.00	9.90	-	44.20/-
SUPS 4-5-3	1 ½	0.25	0.38	2.40	8.40/9.40
SUPS 4-5-4	1 ½	0.37	1.10	3.30	8.70/10.30
SUPS 4-5-6	1 ½	0.55	1.60	4.30	10.20/12.20
SUPS 4-5-9	1 ½	0.75	2.00	5.70	12.10/14.10
SUPS 4-5-13	1 ½	1.10	2.80	8.40	14.70/16.60
SUPS 4-5-18	1 ½	1.50	3.90	10.70	17.30/19.60
SUPS 4-5-23	1 ½	2.20	5.50	14.70	20.50/26.10
SUPS 4-5-27	1 ½	2.20	5.50	14.70	21.80/27.40
SUPS 4-5-32	1 ½	3.00	7.50	-	26.00/-
SUPS 4-5-37	1 ½	3.00	7.50	-	27.60/-
SUPS 4-5-42	1 ½	3.70	9.00	-	34.70/-
SUPS 4-5-45	1 ½	3.70	9.00	-	35.70/-
SUPS 4-5-49	1 ½	4.00	9.90	-	37.90/-
SUPS 4-5-53	1 ½	5.50	12.60	-	45.90/-
SUPS 4-5-57	1 ½	5.50	12.60	-	47.20/-
SUPS 4-5-62	1 ½	5.50	12.60	-	48.80/-
SUPS 4-5-67	1 ½	5.50	12.60	-	50.50/-

SUPS 4

Technical data

Typ	Pipe connection (Rp)	Power output P_2 (kW)	Rated current (A) 3~ 400 V	Rated current (A) 1~ 230 V	Weight (kg) 3~/1~
SUPS 4-8-2	2	0.25	0.68	2.40	8.10/9.10
SUPS 4-8-3	2	0.37	1.10	3.30	8.50/10.10
SUPS 4-8-4	2	0.55	1.60	4.30	9.60/11.60
SUPS 4-8-6	2	0.75	2.00	5.70	11.20/13.20
SUPS 4-8-9	2	1.10	2.80	8.40	13.50/15.40
SUPS 4-8-12	2	1.50	3.90	10.70	15.60/17.90
SUPS 4-8-15	2	2.20	5.50	14.70	18.10/23.70
SUPS 4-8-18	2	2.20	5.50	14.70	19.10/24.70
SUPS 4-8-22	2	3.00	7.50	-	23.00/-
SUPS 4-8-25	2	3.00	7.50	-	24.10/-
SUPS 4-8-28	2	3.70	9.00	-	30.60/-
SUPS 4-8-31	2	3.70	9.00	-	31.60/-
SUPS 4-8-34	2	4.00	9.90	-	33.60/-
SUPS 4-8-38	2	5.50	12.60	-	41.50/-
SUPS 4-8-42	2	5.50	12.60	-	42.90/-
SUPS 4-8-46	2	5.50	12.60	-	44.30/-
SUPS 4-8-52	2	7.50	17.10	-	50.40/-
SUPS 4-8-57	2	7.50	17.10	-	52.10/-
SUPS 4-8-62	2	7.50	17.10	-	53.80/-
SUPS 4-14-2	2	0.55	1.60	-	13.10/-
SUPS 4-14-4	2	1.10	2.80	-	17.50/-
SUPS 4-14-6	2	1.50	3.90	-	20.50/-
SUPS 4-14-8	2	2.20	5.50	-	23.70/-
SUPS 4-14-11	2	3.00	7.50	-	28.90/-
SUPS 4-14-13	2	3.00	7.50	-	30.90/-
SUPS 4-14-15	2	3.70	9.00	-	36.80/-
SUPS 4-14-17	2	4.00	9.90	-	39.40/-
SUPS 4-14-20	2	5.50	12.60	-	49.10/-
SUPS 4-14-23	2	5.50	12.60	-	51.80/-
SUPS 4-14-27	2	7.50	17.10	-	59.70/-
SUPS 4-14-30	2	7.50	17.10	-	62.60/-

SUPS 4

Order information

Type	Three phase 3~ 400 V article no.	Net RRP	Gross RRP	Single-phase 1~ 230 V article no.	Net RRP	Gross RRP
SUPS 4-2-5	514.1402.057	**712.61 €**	848.00 €	514.1402.058	**752.94 €**	896.00 €
SUPS 4-2-7	514.1402.077	**723.53 €**	861.00 €	514.1402.078	**763.87 €**	909.00 €
SUPS 4-2-11	514.1402.117	**824.37 €**	981.00 €	514.1402.118	**875.63 €**	1,042.00 €
SUPS 4-2-15	514.1402.157	**963.87 €**	1,147.00 €	514.1402.158	**1,021.01 €**	1,215.00 €
SUPS 4-2-19	514.1402.197	**1,078.99 €**	1,284.00 €	514.1402.198	**1,153.78 €**	1,373.00 €
SUPS 4-2-23	514.1402.237	**1,167.23 €**	1,389.00 €	514.1402.238	**1,241.18 €**	1,477.00 €
SUPS 4-2-27	514.1402.277	**1,305.04 €**	1,553.00 €	514.1402.278	**1,515.13 €**	1,803.00 €
SUPS 4-2-31	514.1402.317	**1,407.56 €**	1,675.00 €	514.1402.318	**1,613.45 €**	1,920.00 €
SUPS 4-2-37	514.1402.377	**1,844.54 €**	2,195.00 €	514.1402.378	**2,149.58 €**	2,558.00 €
SUPS 4-2-42	514.1402.427	**1,985.71 €**	2,363.00 €	514.1402.428	**2,294.12 €**	2,730.00 €
SUPS 4-2-46	514.1402.467	**2,112.61 €**	2,514.00 €	514.1402.468	**2,420.17 €**	2,880.00 €
SUPS 4-2-52	514.1402.527	**2,320.17 €**	2,761.00 €	-	-	-
SUPS 4-2-57	514.1402.577	**2,419.33 €**	2,879.00 €	-	-	-
SUPS 4-2-62	514.1402.627	**2,456.30 €**	2,923.00 €	-	-	-
SUPS 4-3-4	514.1403.047	**783.19 €**	932.00 €	514.1403.048	**728.57 €**	867.00 €
SUPS 4-3-6	514.1403.067	**698.32 €**	831.00 €	514.1403.068	**741.18 €**	882.00 €
SUPS 4-3-9	514.1403.097	**762.18 €**	907.00 €	514.1403.098	**814.29 €**	969.00 €
SUPS 4-3-12	514.1403.127	**837.82 €**	997.00 €	514.1403.128	**893.28 €**	1,063.00 €
SUPS 4-3-15	514.1403.157	**922.69 €**	1,098.00 €	514.1403.158	**997.48 €**	1,187.00 €
SUPS 4-3-18	514.1403.187	**1,027.73 €**	1,223.00 €	514.1403.188	**1,101.68 €**	1,311.00 €
SUPS 4-3-22	514.1403.227	**1,222.69 €**	1,455.00 €	514.1403.228	**1,429.41 €**	1,701.00 €
SUPS 4-3-25	514.1403.257	**1,285.71 €**	1,530.00 €	514.1403.258	**1,492.44 €**	1,776.00 €
SUPS 4-3-31	514.1403.317	**1,464.71 €**	1,743.00 €	514.1403.318	**1,770.59 €**	2,107.00 €
SUPS 4-3-37	514.1403.377	**1,604.20 €**	1,909.00 €	514.1403.378	**1,911.76 €**	2,275.00 €
SUPS 4-3-44	514.1403.447	**2,094.96 €**	2,493.00 €	-	-	-
SUPS 4-3-51	514.1403.517	**2,260.50 €**	2,690.00 €	-	-	-
SUPS 4-3-57	514.1403.577	**2,494.12 €**	2,968.00 €	-	-	-
SUPS 4-3-62	514.1403.627	**2,600.00 €**	3,094.00 €	-	-	-
SUPS 4-3-67	514.1403.677	**2,737.82 €**	3,258.00 €	-	-	-
SUPS 4-5-3	514.1405.037	**677.31 €**	806.00 €	514.1405.038	**717.65 €**	854.00 €
SUPS 4-5-4	514.1405.047	**687.39 €**	818.00 €	514.1405.048	**727.73 €**	866.00 €
SUPS 4-5-6	514.1405.067	**755.46 €**	899.00 €	514.1405.068	**807.56 €**	961.00 €
SUPS 4-5-9	514.1405.097	**791.60 €**	942.00 €	514.1405.098	**848.74 €**	1,010.00 €
SUPS 4-5-13	514.1405.137	**936.13 €**	1,114.00 €	514.1405.138	**1,010.08 €**	1,202.00 €
SUPS 4-5-18	514.1405.187	**1,126.05 €**	1,340.00 €	514.1405.188	**1,342.02 €**	1,597.00 €
SUPS 4-5-23	514.1405.237	**1,345.38 €**	1,601.00 €	514.1405.238	**1,652.10 €**	1,966.00 €
SUPS 4-5-27	514.1405.277	**1,501.68 €**	1,787.00 €	514.1405.278	**1,809.24 €**	2,153.00 €
SUPS 4-5-32	514.1405.327	**1,733.61 €**	2,063.00 €	-	-	-
SUPS 4-5-37	514.1405.377	**1,839.50 €**	2,189.00 €	-	-	-
SUPS 4-5-42	514.1405.427	**2,522.69 €**	3,002.00 €	-	-	-
SUPS 4-5-45	514.1405.457	**2,647.90 €**	3,151.00 €	-	-	-
SUPS 4-5-49	514.1405.497	**2,798.32 €**	3,330.00 €	-	-	-
SUPS 4-5-53	514.1405.537	**3,056.30 €**	3,637.00 €	-	-	-
SUPS 4-5-57	514.1405.577	**3,123.53 €**	3,717.00 €	-	-	-
SUPS 4-5-62	514.1405.627	**3,189.08 €**	3,795.00 €	-	-	-
SUPS 4-5-67	514.1405.677	**3,245.38 €**	3,862.00 €	-	-	-

SUPS 4

Order information

Type	Three phase 3~ 400 V article no.	Net RRP	Gross RRP	Single-phase 1~ 230 V article no.	Net RRP	Gross RRP
SUPS 4-8-2	514.1408.027	**757.98 €**	902.00 €	514.1408.028	**704.20 €**	838.00 €
SUPS 4-8-3	514.1408.037	**673.11 €**	801.00 €	514.1408.038	**715.97 €**	852.00 €
SUPS 4-8-4	514.1408.047	**700.00 €**	833.00 €	514.1408.048	**752.10 €**	895.00 €
SUPS 4-8-6	514.1408.067	**758.82 €**	903.00 €	514.1408.068	**815.97 €**	971.00 €
SUPS 4-8-9	514.1408.097	**859.66 €**	1,023.00 €	514.1408.098	**936.13 €**	1,114.00 €
SUPS 4-8-12	514.1408.127	**993.28 €**	1,182.00 €	514.1408.128	**1,245.38 €**	1,482.00 €
SUPS 4-8-15	514.1408.157	**1,253.78 €**	1,492.00 €	514.1408.158	**1,570.59 €**	1,869.00 €
SUPS 4-8-18	514.1408.187	**1,325.21 €**	1,577.00 €	514.1408.188	**1,643.70 €**	1,956.00 €
SUPS 4-8-22	514.1408.227	**1,596.64 €**	1,900.00 €	-	-	-
SUPS 4-8-25	514.1408.257	**1,670.59 €**	1,988.00 €	-	-	-
SUPS 4-8-28	514.1408.287	**1,881.51 €**	2,239.00 €	-	-	-
SUPS 4-8-31	514.1408.317	**1,956.30 €**	2,328.00 €	-	-	-
SUPS 4-8-34	514.1408.347	**2,056.30 €**	2,447.00 €	-	-	-
SUPS 4-8-38	514.1408.387	**2,482.35 €**	2,954.00 €	-	-	-
SUPS 4-8-42	514.1408.427	**2,992.44 €**	3,561.00 €	-	-	-
SUPS 4-8-46	514.1408.467	**3,136.97 €**	3,733.00 €	-	-	-
SUPS 4-8-52	514.1408.527	**3,514.29 €**	4,182.00 €	-	-	-
SUPS 4-8-57	514.1408.577	**3,659.66 €**	4,355.00 €	-	-	-
SUPS 4-8-62	514.1408.627	**3,808.40 €**	4,532.00 €	-	-	-
SUPS 4-14-2	514.1414.027	**863.03 €**	1,027.00 €	-	-	-
SUPS 4-14-4	514.1414.047	**1,056.30 €**	1,257.00 €	-	-	-
SUPS 4-14-6	514.1414.067	**1,238.66 €**	1,474.00 €	-	-	-
SUPS 4-14-8	514.1414.087	**1,453.78 €**	1,730.00 €	-	-	-
SUPS 4-14-11	514.1414.117	**1,885.71 €**	2,244.00 €	-	-	-
SUPS 4-14-13	514.1414.137	**2,039.50 €**	2,427.00 €	-	-	-
SUPS 4-14-15	514.1414.157	**2,303.36 €**	2,741.00 €	-	-	-
SUPS 4-14-17	514.1414.177	**2,532.77 €**	3,014.00 €	-	-	-
SUPS 4-14-20	514.1414.207	**2,873.95 €**	3,420.00 €	-	-	-
SUPS 4-14-23	514.1414.237	**3,103.36 €**	3,693.00 €	-	-	-
SUPS 4-14-27	514.1414.277	**3,633.61 €**	4,324.00 €	-	-	-
SUPS 4-14-30	514.1414.307	**3,868.91 €**	4,604.00 €	-	-	-

SUPS 4

Dimensions

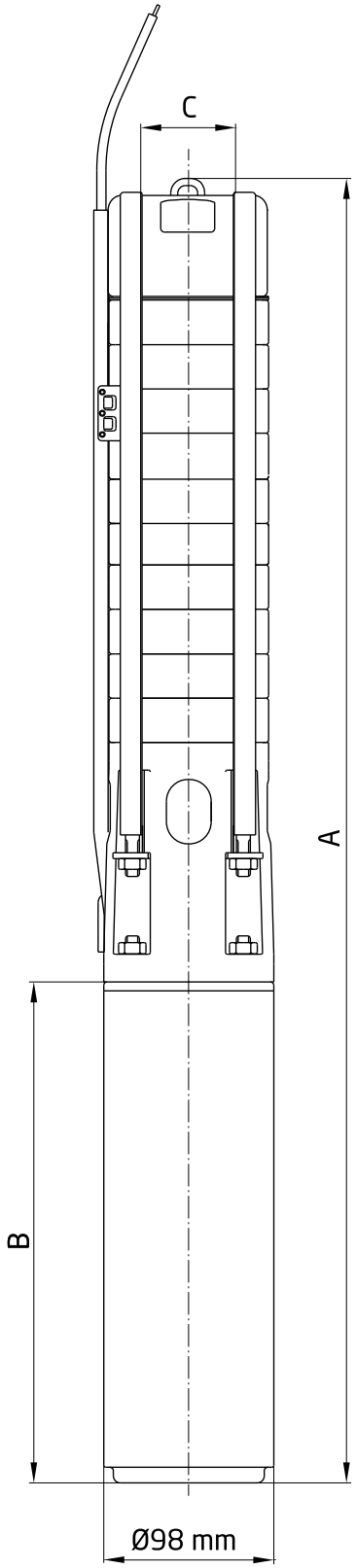

SUPS 4

Dimensions

Type	A 3~/1~	B 3~/1~	C
SUPS 4-2-5	538/538	237/237	Rp 1 ½
SUPS 4-2-7	610/624	237/251	Rp 1 ½
SUPS 4-2-11	721/746	251/276	Rp 1 ½
SUPS 4-2-15	837/863	271/297	Rp 1 ½
SUPS 4-2-19	960/984	297/321	Rp 1 ½
SUPS 4-2-23	1056/1080	297/321	Rp 1 ½
SUPS 4-2-27	1177/1209	321/353	Rp 1 ½
SUPS 4-2-31	1273/1305	321/353	Rp 1 ½
SUPS 4-2-37	1450/1548	353/451	Rp 1 ½
SUPS 4-2-42	1570/1668	353/451	Rp 1 ½
SUPS 4-2-46	1667/1765	353/451	Rp 1 ½
SUPS 4-2-52	1867/-	408/-	Rp 1 ½
SUPS 4-2-57	1987/-	408/-	Rp 1 ½
SUPS 4-2-62	2108/-	408/-	Rp 1 ½
SUPS 4-3-4	537/537	237/237	Rp 1 ½
SUPS 4-3-6	568/600	237/251	Rp 1 ½
SUPS 4-3-9	672/697	251/276	Rp 1 ½
SUPS 4-3-12	764/790	271/297	Rp 1 ½
SUPS 4-3-15	863/887	297/321	Rp 1 ½
SUPS 4-3-18	935/959	297/321	Rp 1 ½
SUPS 4-3-22	1056/1088	321/353	Rp 1 ½
SUPS 4-3-25	112/1160	321/353	Rp 1 ½
SUPS 4-3-31	1305/1403	353/451	Rp 1 ½
SUPS 4-3-37	1449/1547	353/451	Rp 1 ½
SUPS 4-3-44	1673/-	408/-	Rp 1 ½
SUPS 4-3-51	1842/-	408/-	Rp 1 ½
SUPS 4-3-57	2099/-	520/-	Rp 1 ½
SUPS 4-3-62	2219/-	520/-	Rp 1 ½
SUPS 4-3-67	2363/-	543/-	Rp 1 ½
SUPS 4-5-3	513/513	237/237	Rp 1 ½
SUPS 4-5-4	537/551	237/251	Rp 1 ½
SUPS 4-5-6	600/625	251/276	Rp 1 ½
SUPS 4-5-9	692/718	271/297	Rp 1 ½
SUPS 4-5-13	815/839	297/321	Rp 1 ½
SUPS 4-5-18	959/991	321/353	Rp 1 ½
SUPS 4-5-23	1112/1210	353/451	Rp 1 ½
SUPS 4-5-27	1208/1306	353/451	Rp 1 ½
SUPS 4-5-32	1384/-	408/-	Rp 1 ½
SUPS 4-5-37	1504/-	408/-	Rp 1 ½
SUPS 4-5-42	1737/-	520/-	Rp 1 ½
SUPS 4-5-45	1809/-	520/-	Rp 1 ½
SUPS 4-5-49	1929/-	543/-	Rp 1 ½
SUPS 4-5-53	2135/-	652/-	Rp 1 ½
SUPS 4-5-57	2232/-	652/-	Rp 1 ½
SUPS 4-5-62	2352/-	652/-	Rp 1 ½
SUPS 4-5-67	2473/-	652/-	Rp 1 ½

Type	A 3~/1~	B 3~/1~	C
SUPS 4-8-2	489/489	237/237	Rp 2
SUPS 4-8-3	513/527	237/251	Rp 2
SUPS 4-8-4	551/576	251/276	Rp 2
SUPS 4-8-6	620/646	271/297	Rp 2
SUPS 4-8-9	718/742	297/321	Rp 2
SUPS 4-8-12	814/846	321/353	Rp 2
SUPS 4-8-15	919/1017	353/451	Rp 2
SUPS 4-8-18	991/1089	353/451	Rp 2
SUPS 4-8-22	1143/-	408/-	Rp 2
SUPS 4-8-25	1215/-	408/-	Rp 2
SUPS 4-8-28	1399/-	520/-	Rp 2
SUPS 4-8-31	1472/-	520/-	Rp 2
SUPS 4-8-34	1567/-	543/-	Rp 2
SUPS 4-8-38	1774/-	652/-	Rp 2
SUPS 4-8-42	1870/-	652/-	Rp 2
SUPS 4-8-46	1967/-	652/-	Rp 2
SUPS 4-8-52	2189/-	730/-	Rp 2
SUPS 4-8-57	2340/-	730/-	Rp 2
SUPS 4-8-62	2340/-	730/-	Rp 2
SUPS 4-14-2	567/-	226/-	Rp 2
SUPS 4-14-4	773/-	282/-	Rp 2
SUPS 4-14-6	948/-	307/-	Rp 2
SUPS 4-14-8	1130/-	339/-	Rp 2
SUPS 4-14-11	1410/-	394/-	Rp 2
SUPS 4-14-13	1560/-	394/-	Rp 2
SUPS 4-14-15	1836/-	520/-	Rp 2
SUPS 4-14-17	2009/-	543/-	Rp 2
SUPS 4-14-20	2344/-	653/-	Rp 2
SUPS 4-14-23	2569/-	653/-	Rp 2
SUPS 4-14-27	2947/-	731/-	Rp 2
SUPS 4-14-30	3172/-	731/-	Rp 2

SUPS 6

Borehole pumps

Field of application
– Water supply
– Irrigation
– Fountain systems
– Rainwater utilisation
– Groundwater reduction

Design
Three-phase:
Pump complete with 4" three phase motor, direct start, 3~ 400 V, 50 Hz, 2800 rpm, up to 4.00 kW
Pump complete with 6" three-phase motor, direct or star-delta start, 3~ 400 V, 50 Hz, 2800 rpm, from 5.50 kW
All pumps including non-return valve.

Motor
Protection class	IP 68
Class of insulation	B
Voltage	3~ 400 V ± 10 %
Start type	Direct start or star-delta start
Motor speed	2800 rpm
Frequency	50 Hz

Technical data
Flow rate	Q up to max. 80 m³/h
Total dynamic head	H up to max. 340 mWs
Fluid temperature	t up to max. 30 °C
Sand content	up to max. 150 g/m³

Pumped fluid
Pure, cold water.

Materials used
Lantern with inlet housing	stainless steel AISI CF8M
Stages/impellers	stainless steel AISI 304
Shaft	stainless steel AISI 431
Coupling	stainless steel AISI CF8
Wear ring	stainless steel AISI 316 L
Bearings/intermediate bearings	NBR
Strainer	stainless steel AISI 304

Type key
SUPS 6-17-10
SUP	SPECK borehole pump
S	stainless steel design
6	pump type 6"
17	pump size
10	number of stages

Special editions
– Special material AISI 316
– Higher fluid temperatures

SUPS 6

Characteristics

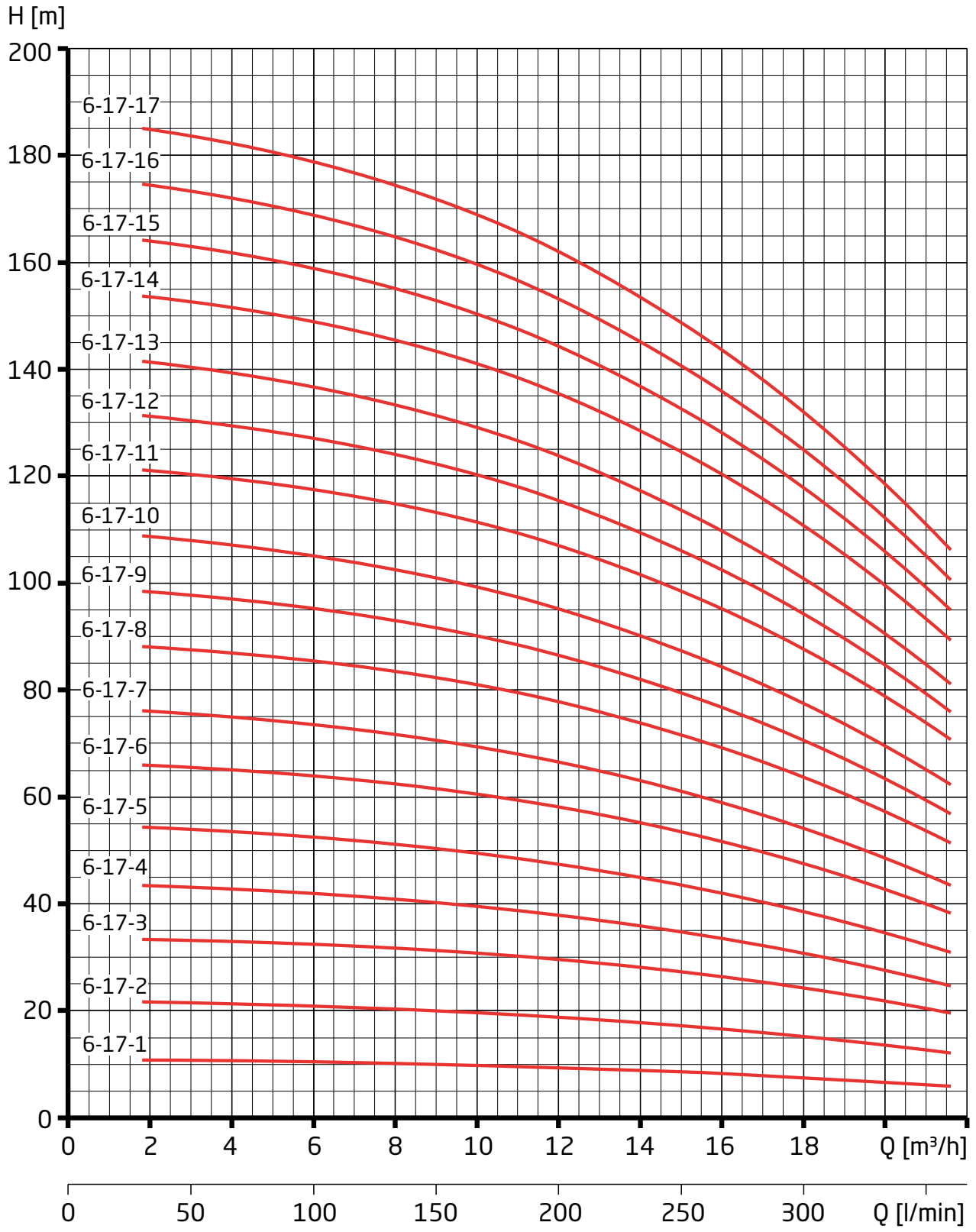

SUPS 6

Characteristics

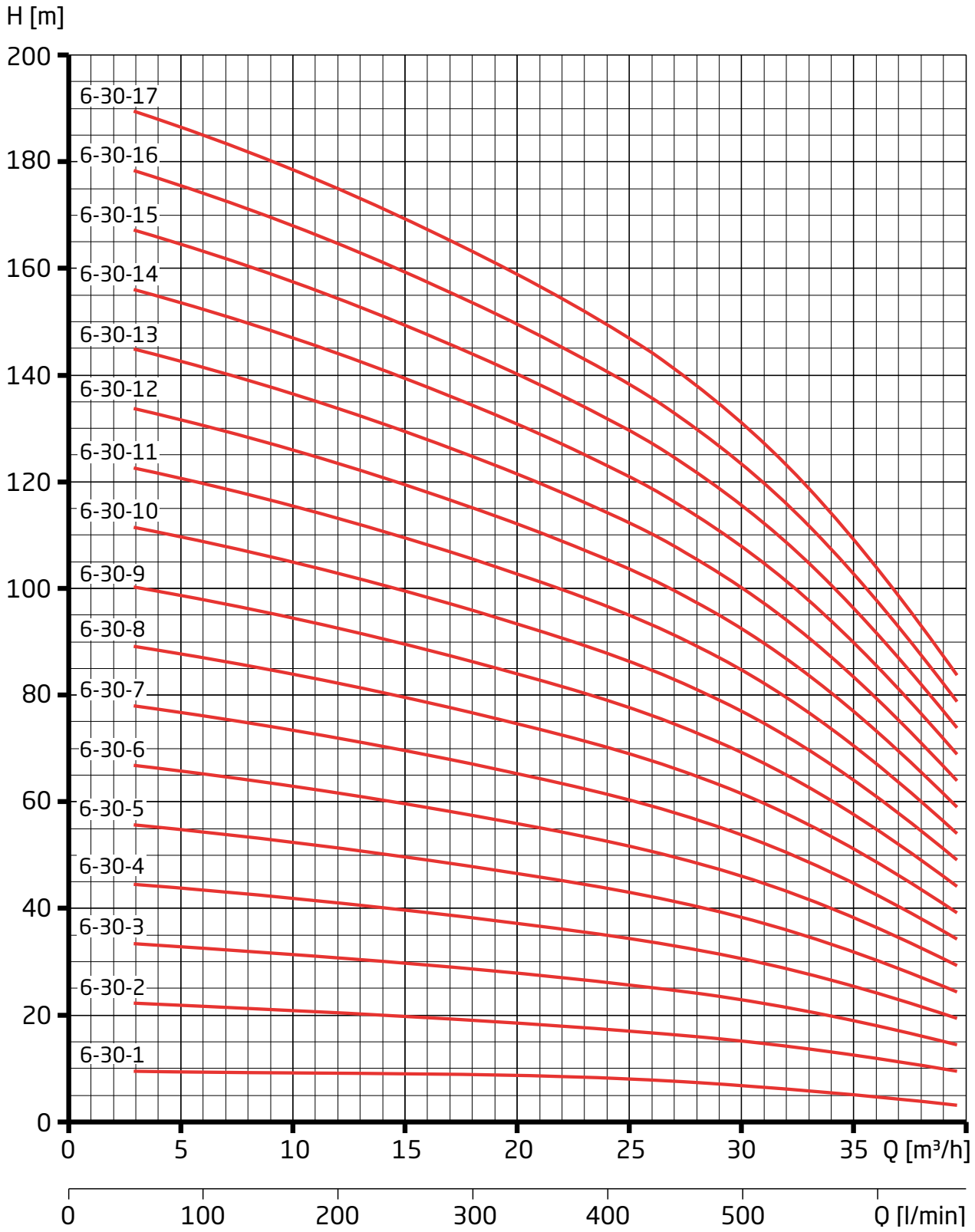

SUPS 6

Characteristics

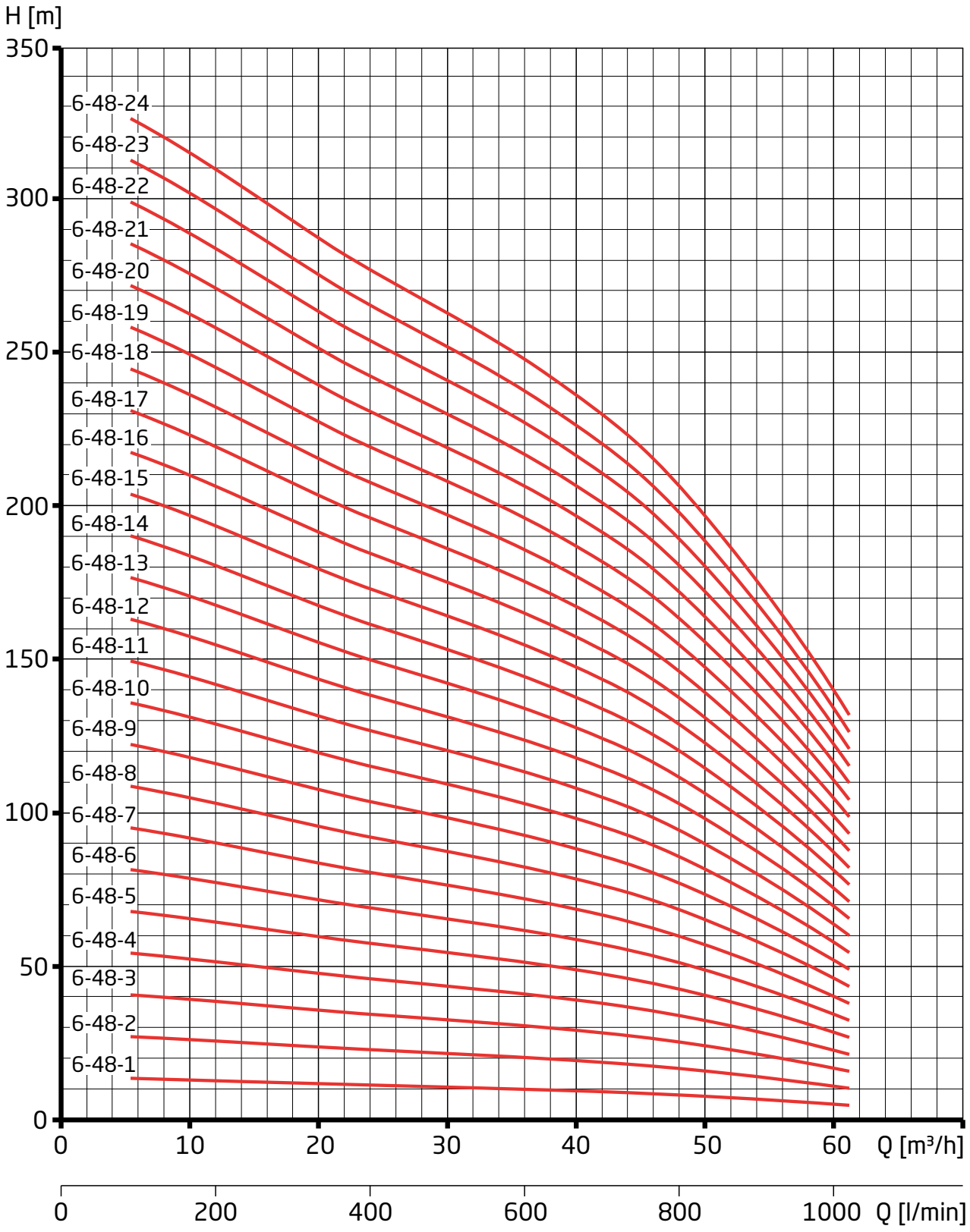

SUPS 6

Characteristics

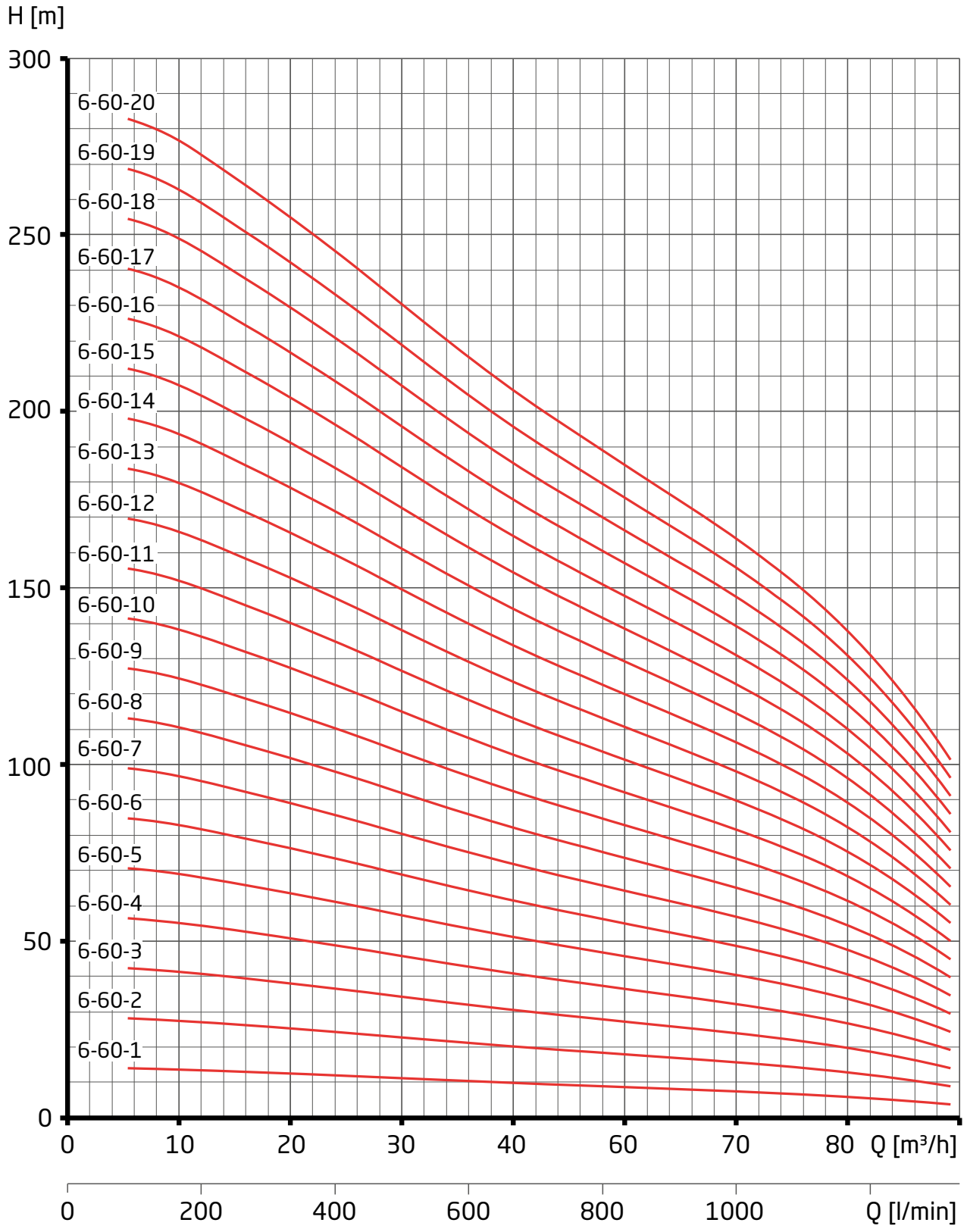

SUPS 6

Technical data

Type	Pipe connection (Rp)	Power output P_2 (kW)	Motor Ø	Rated current (A) 3~ 400 V	Weight (kg)
SUPS 6-17-1	2 ½	0.55	4″	1.60	15.00
SUPS 6-17-2	2 ½	1.10	4″	2.80	19.00
SUPS 6-17-3	2 ½	2.20	4″	5.50	23.00
SUPS 6-17-4	2 ½	2.20	4″	5.50	24.00
SUPS 6-17-5	2 ½	3.00	4″	7.50	28.00
SUPS 6-17-6	2 ½	4.00	4″	9.90	38.00
SUPS 6-17-7	2 ½	4.00	4″	9.90	39.00
SUPS 6-17-8	2 ½	5.50	6″	12.50	66.00
SUPS 6-17-9	2 ½	5.50	6″	12.50	67.00
SUPS 6-17-10	2 ½	5.50	6″	12.50	68.00
SUPS 6-17-11	2 ½	7.50	6″	16.00	72.00
SUPS 6-17-12	2 ½	7.50	6″	16.00	73.00
SUPS 6-17-13	2 ½	7.50	6″	16.00	74.00
SUPS 6-17-14	2 ½	9.30	6″	20.70	79.00
SUPS 6-17-15	2 ½	9.30	6″	20.70	80.00
SUPS 6-17-16	2 ½	9.30	6″	20.70	82.00
SUPS 6-17-17	2 ½	9.30	6″	20.70	83.00
SUPS 6-30-1	3	1.10	4″	2.80	18.00
SUPS 6-30-2	3	2.20	4″	5.50	22.00
SUPS 6-30-3	3	3.00	4″	7.50	27.00
SUPS 6-30-4	3	4.00	4″	9.90	36.00
SUPS 6-30-5	3	5.50	6″	12.50	63.00
SUPS 6-30-6	3	5.50	6″	12.50	64.00
SUPS 6-30-7	3	7.50	6″	16.00	68.00
SUPS 6-30-8	3	7.50	6″	16.00	70.00
SUPS 6-30-9	3	9.30	6″	20.70	74.00
SUPS 6-30-10	3	9.30	6″	20.70	76.00
SUPS 6-30-11	3	9.30	6″	20.70	77.00
SUPS 6-30-12	3	11.00	6″	23.30	82.00
SUPS 6-30-13	3	11.00	6″	23.30	84.00
SUPS 6-30-14	3	15.00	6″	31.30	90.00
SUPS 6-30-15	3	15.00	6″	31.30	92.00
SUPS 6-30-16	3	15.00	6″	31.30	98.00
SUPS 6-30-17	3	15.00	6″	31.30	100.00

SUPS 6

Technical data

Type	Pipe connection (Rp)	Power output P_2 (kW)	Motor Ø	Rated current (A) 3~ 400 V	Weight (kg)
SUPS 6-48-1	3	2.20	4"	5.50	23.00
SUPS 6-48-2	3	3.00	4"	7.50	28.00
SUPS 6-48-3	3	5.50	6"	12.50	63.00
SUPS 6-48-4	3	7.50	6"	16.00	68.00
SUPS 6-48-5	3	7.50	6"	16.00	70.00
SUPS 6-48-6	3	9.30	6"	20.70	75.00
SUPS 6-48-7	3	11.00	6"	23.30	80.00
SUPS 6-48-8	3	15.00	6"	31.30	88.00
SUPS 6-48-9	3	15.00	6"	31.30	95.00
SUPS 6-48-10	3	15.00	6"	31.30	97.00
SUPS 6-48-11	3	18.50	6"	38.50	103.00
SUPS 6-48-12	3	18.50	6"	38.50	106.00
SUPS 6-48-13	3	22.00	6"	45.30	117.00
SUPS 6-48-14	3	22.00	6"	45.30	119.00
SUPS 6-48-15	3	22.00	6"	45.30	122.00
SUPS 6-48-16	3	30.00	6"	63.50	135.00
SUPS 6-48-17	3	30.00	6"	63.50	137.00
SUPS 6-48-18	3	30.00	6"	63.50	149.00
SUPS 6-48-19	3	30.00	6"	63.50	152.00
SUPS 6-48-20	3	30.00	6"	63.50	154.00
SUPS 6-48-21	3	37.00	6"	77.90	163.00
SUPS 6-48-22	3	37.00	6"	77.90	165.00
SUPS 6-48-23	3	37.00	6"	77.90	168.00
SUPS 6-48-24	3	37.00	6"	77.90	170.00
SUPS 6-60-1	3	2.20	4"	5.50	23.00
SUPS 6-60-2	3	4.00	4"	9.90	36.00
SUPS 6-60-3	3	5.50	6"	12.50	63.00
SUPS 6-60-4	3	7.50	6"	16.00	67.00
SUPS 6-60-5	3	9.30	6"	20.70	73.00
SUPS 6-60-6	3	11.00	6"	23.30	78.00
SUPS 6-60-7	3	15.00	6"	31.30	85.00
SUPS 6-60-8	3	15.00	6"	31.30	93.00
SUPS 6-60-9	3	18.50	6"	38.50	99.00
SUPS 6-60-10	3	18.50	6"	38.50	101.00
SUPS 6-60-11	3	22.00	6"	45.30	112.00
SUPS 6-60-12	3	22.00	6"	45.30	115.00
SUPS 6-60-13	3	30.00	6"	63.50	128.00
SUPS 6-60-14	3	30.00	6"	63.50	130.00
SUPS 6-60-15	3	30.00	6"	63.50	132.00
SUPS 6-60-16	3	30.00	6"	63.50	145.00
SUPS 6-60-17	3	30.00	6"	63.50	147.00
SUPS 6-60-18	3	37.00	6"	77.90	156.00
SUPS 6-60-19	3	37.00	6"	77.90	158.00
SUPS 6-60-20	3	37.00	6"	77.90	161.00

SUPS 6

Order information

Type	Motor Ø	Direct start DOL article no.	Net RRP	Gross RRP	Star-delta start Y/Δ article no.	Net RRP	Gross RRP
SUPS 6-17-1	4"	517.1617.017	**1,410.08 €**	1,678.00 €	-	-	-
SUPS 6-17-2	4"	517.1617.027	**1,582.35 €**	1,883.00 €	-	-	-
SUPS 6-17-3	4"	517.1617.037	**1,798.32 €**	2,140.00 €	-	-	-
SUPS 6-17-4	4"	517.1617.047	**1,912.61 €**	2,276.00 €	-	-	-
SUPS 6-17-5	4"	517.1617.057	**2,147.06 €**	2,555.00 €	-	-	-
SUPS 6-17-6	4"	517.1617.067	**2,408.40 €**	2,866.00 €	-	-	-
SUPS 6-17-7	4"	517.1617.077	**2,504.20 €**	2,980.00 €	-	-	-
SUPS 6-17-8	6"	517.1617.087	**3,400.84 €**	4,047.00 €	**517.1617.089**	**3,400.84 €**	4,047.00 €
SUPS 6-17-9	6"	517.1617.097	**3,499.16 €**	4,164.00 €	**517.1617.099**	**3,499.16 €**	4,164.00 €
SUPS 6-17-10	6"	517.1617.107	**3,654.62 €**	4,349.00 €	**517.1617.109**	**3,654.62 €**	4,349.00 €
SUPS 6-17-11	6"	517.1617.117	**4,164.71 €**	4,956.00 €	**517.1617.119**	**4,164.71 €**	4,956.00 €
SUPS 6-17-12	6"	517.1617.127	**4,295.80 €**	5,112.00 €	**517.1617.129**	**4,295.80 €**	5,112.00 €
SUPS 6-17-13	6"	517.1617.137	**4,562.18 €**	5,429.00 €	**517.1617.139**	**4,562.18 €**	5,429.00 €
SUPS 6-17-14	6"	517.1617.147	**5,067.23 €**	6,030.00 €	**517.1617.149**	**5,067.23 €**	6,030.00 €
SUPS 6-17-15	6"	517.1617.157	**5,196.64 €**	6,184.00 €	**517.1617.159**	**5,196.64 €**	6,184.00 €
SUPS 6-17-16	6"	517.1617.167	**5,331.93 €**	6,345.00 €	**517.1617.169**	**5,331.93 €**	6,345.00 €
SUPS 6-17-17	6"	517.1617.177	**5,467.23 €**	6,506.00 €	**517.1617.179**	**5,467.23 €**	6,506.00 €
SUPS 6-30-1	4"	517.1630.017	**1,674.79 €**	1,993.00 €	-	-	-
SUPS 6-30-2	4"	517.1630.027	**1,861.34 €**	2,215.00 €	-	-	-
SUPS 6-30-3	4"	517.1630.037	**1,997.48 €**	2,377.00 €	-	-	-
SUPS 6-30-4	4"	517.1630.047	**2,306.72 €**	2,745.00 €	-	-	-
SUPS 6-30-5	6"	517.1630.057	**3,242.86 €**	3,859.00 €	**517.1630.059**	**3,242.86 €**	3,859.00 €
SUPS 6-30-6	6"	517.1630.067	**3,304.20 €**	3,932.00 €	**517.1630.069**	**3,304.20 €**	3,932.00 €
SUPS 6-30-7	6"	517.1630.077	**3,477.31 €**	4,138.00 €	**517.1630.079**	**3,477.31 €**	4,138.00 €
SUPS 6-30-8	6"	517.1630.087	**3,661.34 €**	4,357.00 €	**517.1630.089**	**3,661.34 €**	4,357.00 €
SUPS 6-30-9	6"	517.1630.097	**3,994.12 €**	4,753.00 €	**517.1630.099**	**3,994.12 €**	4,753.00 €
SUPS 6-30-10	6"	517.1630.107	**4,176.47 €**	4,970.00 €	**517.1630.109**	**4,176.47 €**	4,970.00 €
SUPS 6-30-11	6"	517.1630.117	**4,355.46 €**	5,183.00 €	**517.1630.119**	**4,355.46 €**	5,183.00 €
SUPS 6-30-12	6"	517.1630.127	**4,795.80 €**	5,707.00 €	**517.1630.129**	**4,795.80 €**	5,707.00 €
SUPS 6-30-13	6"	517.1630.137	**5,000.00 €**	5,950.00 €	**517.1630.139**	**5,000.00 €**	5,950.00 €
SUPS 6-30-14	6"	517.1630.147	**5,987.39 €**	7,125.00 €	**517.1630.149**	**5,987.39 €**	7,125.00 €
SUPS 6-30-15	6"	517.1630.157	**6,194.96 €**	7,372.00 €	**517.1630.159**	**6,194.96 €**	7,372.00 €
SUPS 6-30-16	6"	517.1630.167	**6,400.84 €**	7,617.00 €	**517.1630.169**	**6,400.84 €**	7,617.00 €
SUPS 6-30-17	6"	517.1630.177	**6,606.72 €**	7,862.00 €	**517.1630.179**	**6,606.72 €**	7,862.00 €

SUPS 6

Order information

Type	Motor Ø	Direct start DOL article no.	Net RRP	Gross RRP	Star-delta start Y/Δ article no.	Net RRP	Gross RRP
SUPS 6-48-1	4"	517.1648.017	1,831.93 €	2,180.00 €	-	-	-
SUPS 6-48-2	4"	517.1648.027	2,105.88 €	2,506.00 €	-	-	-
SUPS 6-48-3	6"	517.1648.037	3,336.97 €	3,971.00 €	517.1648.039	3,336.97 €	3,971.00 €
SUPS 6-48-4	6"	517.1648.047	3,536.97 €	4,209.00 €	517.1648.049	3,536.97 €	4,209.00 €
SUPS 6-48-5	6"	517.1648.057	3,682.35 €	4,382.00 €	517.1648.059	3,682.35 €	4,382.00 €
SUPS 6-48-6	6"	517.1648.067	3,994.12 €	4,753.00 €	517.1648.069	3,994.12 €	4,753.00 €
SUPS 6-48-7	6"	517.1648.077	4,194.12 €	4,991.00 €	517.1648.079	4,194.12 €	4,991.00 €
SUPS 6-48-8	6"	517.1648.087	5,031.93 €	5,988.00 €	517.1648.089	5,031.93 €	5,988.00 €
SUPS 6-48-9	6"	517.1648.097	5,111.76 €	6,083.00 €	517.1648.099	5,111.76 €	6,083.00 €
SUPS 6-48-10	6"	517.1648.107	5,453.78 €	6,490.00 €	517.1648.109	5,453.78 €	6,490.00 €
SUPS 6-48-11	6"	517.1648.117	6,825.21 €	8,122.00 €	517.1648.119	6,825.21 €	8,122.00 €
SUPS 6-48-12	6"	517.1648.127	7,209.24 €	8,579.00 €	517.1648.129	7,209.24 €	8,579.00 €
SUPS 6-48-13	6"	517.1648.137	8,026.05 €	9,551.00 €	517.1648.139	8,026.05 €	9,551.00 €
SUPS 6-48-14	6"	517.1648.147	8,403.36 €	10,000.00 €	517.1648.149	8,403.36 €	10,000.00 €
SUPS 6-48-15	6"	517.1648.157	8,788.24 €	10,458.00 €	517.1648.159	8,788.24 €	10,458.00 €
SUPS 6-48-16	6"	517.1648.167	9,654.62 €	11,489.00 €	517.1648.169	9,654.62 €	11,489.00 €
SUPS 6-48-17	6"	517.1648.177	10,178.99 €	12,113.00 €	517.1648.179	10,178.99 €	12,113.00 €
SUPS 6-48-18	6"	517.1648.187	10,611.76 €	12,628.00 €	517.1648.189	10,611.76 €	12,628.00 €
SUPS 6-48-19	6"	517.1648.197	11,205.88 €	13,335.00 €	517.1648.199	11,205.88 €	13,335.00 €
SUPS 6-48-20	6"	517.1648.207	11,581.51 €	13,782.00 €	517.1648.209	11,581.51 €	13,782.00 €
SUPS 6-48-21	6"	517.1648.217	12,175.63 €	14,489.00 €	517.1648.219	12,175.63 €	14,489.00 €
SUPS 6-48-22	6"	517.1648.227	12,527.73 €	14,908.00 €	517.1648.229	12,527.73 €	14,908.00 €
SUPS 6-48-23	6"	517.1648.237	12,878.99 €	15,326.00 €	517.1648.239	12,878.99 €	15,326.00 €
SUPS 6-48-24	6"	517.1648.247	13,226.05 €	15,739.00 €	517.1648.249	13,226.05 €	15,739.00 €
SUPS 6-60-1	4"	517.1660.017	1,907.56 €	2,270.00 €	-	-	-
SUPS 6-60-2	4"	517.1660.027	2,234,45 €	2,659.00 €	-	-	-
SUPS 6-60-3	6"	517.1660.037	3,082.35 €	3,668.00 €	517.1660.039	3,082.35 €	3,668.00 €
SUPS 6-60-4	6"	517.1660.047	3,770.59 €	4,487.00 €	517.1660.049	3,770.59 €	4,487.00 €
SUPS 6-60-5	6"	517.1660.057	3,985.71 €	4,743.00 €	517.1660.059	3,985.71 €	4,743.00 €
SUPS 6-60-6	6"	517.1660.067	4,063.87 €	4,836.00 €	517.1660.069	4,063.87 €	4,836.00 €
SUPS 6-60-7	6"	517.1660.077	4,352.10 €	5,179.00 €	517.1660.079	4,352.10 €	5,179.00 €
SUPS 6-60-8	6"	517.1660.087	4,809.24 €	5,723.00 €	517.1660.089	4,809.24 €	5,723.00 €
SUPS 6-60-9	6"	517.1660.097	5,228.57 €	6,222.00 €	517.1660.099	5,228.57 €	6,222.00 €
SUPS 6-60-10	6"	517.1660.107	5,517.65 €	6,566.00 €	517.1660.109	5,517.65 €	6,566.00 €
SUPS 6-60-11	6"	517.1660.117	6,696.64 €	7,969.00 €	517.1660.119	6,696.64 €	7,969.00 €
SUPS 6-60-12	6"	517.1660.127	7,273.95 €	8,656.00 €	517.1660.129	7,273.95 €	8,656.00 €
SUPS 6-60-13	6"	517.1660.137	8,029.41 €	9,555.00 €	517.1660.139	8,029.41 €	9,555.00 €
SUPS 6-60-14	6"	517.1660.147	8,440.34 €	10,044.00 €	517.1660.149	8,440.34 €	10,044.00 €
SUPS 6-60-15	6"	517.1660.157	8,737.82 €	10,398.00 €	517.1660.159	8,737.82 €	10,398.00 €
SUPS 6-60-16	6"	517.1660.167	9,100.00 €	10,829.00 €	517.1660.169	9,100.00 €	10,829.00 €
SUPS 6-60-17	6"	517.1660.177	9,404.20 €	11,191.00 €	517.1660.179	9,404.20 €	11,191.00 €
SUPS 6-60-18	6"	517.1660.187	10,635.29 €	12,656.00 €	517.1660.189	10,635.29 €	12,656.00 €
SUPS 6-60-19	6"	517.1660.197	10,936.97 €	13,015.00 €	517.1660.199	10,936.97 €	13,015.00 €
SUPS 6-60-20	6"	517.1660.207	11,236.97 €	13,372.00 €	517.1660.209	11,236.97 €	13,372.00 €
Optional accessories in connection with the SPR-E/SPR-H speed controls							
PTC thermistor up to 4.0 kW					510.5000.301	1,193.28 €	1,420.00 €
PTC thermistor from 5.5 kW					510.5000.300	425.21 €	506.00 €
PTC thermistor 10 m					510.5000.310	105.88 €	126.00 €
PTC thermistor 20 m					510.5000.320	162.18 €	193.00 €
PTC thermistor 30 m					510.5000.330	219.33 €	261.00 €
PTC thermistor 50 m					510.5000.350	33.36 €	39.70 €

SUPS 6

Dimensions

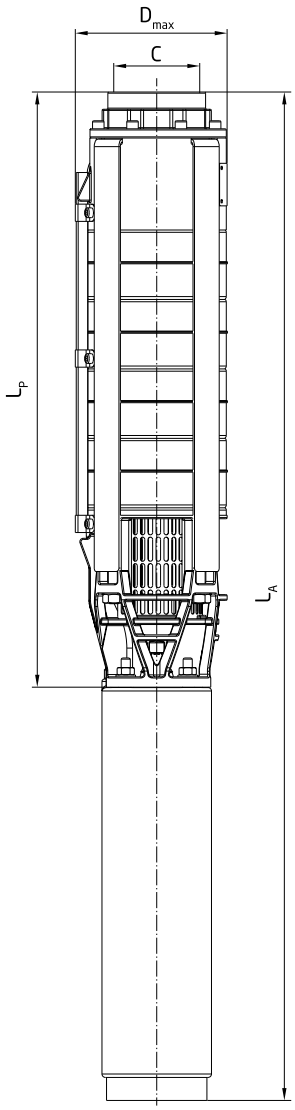

Type	Motor Ø	L_A	L_P	D_{max}	C	Type	Motor Ø	L_A	L_P	D_{max}	C
SUPS 6-17-1	4"	579	337	139	Rp 2 ½	**SUPS 6-30-1**	4"	688	389	139	Rp 3
SUPS 6-17-2	4"	696	397	139	Rp 2 ½	**SUPS 6-30-2**	4"	841	485	139	Rp 3
SUPS 6-17-3	4"	814	458	139	Rp 2 ½	**SUPS 6-30-3**	4"	1004	581	139	Rp 3
SUPS 6-17-4	4"	874	518	139	Rp 2 ½	**SUPS 6-30-4**	4"	1260	677	139	Rp 3
SUPS 6-17-5	4"	1002	579	139	Rp 2 ½	**SUPS 6-30-5**	6"	1504	805	142	Rp 3
SUPS 6-17-6	4"	1222	639	139	Rp 2 ½	**SUPS 6-30-6**	6"	1600	901	142	Rp 3
SUPS 6-17-7	4"	1283	700	139	Rp 2 ½	**SUPS 6-30-7**	6"	1716	997	142	Rp 3
SUPS 6-17-8	6"	1491	792	142	Rp 2 ½	**SUPS 6-30-8**	6"	1812	1093	142	Rp 3
SUPS 6-17-9	6"	1551	852	142	Rp 2 ½	**SUPS 6-30-9**	6"	1938	1189	142	Rp 3
SUPS 6-17-10	6"	1612	913	142	Rp 2 ½	**SUPS 6-30-10**	6"	2034	1285	142	Rp 3
SUPS 6-17-11	6"	1692	973	142	Rp 2 ½	**SUPS 6-30-11**	6"	2130	1381	142	Rp 3
SUPS 6-17-12	6"	1753	1034	142	Rp 2 ½	**SUPS 6-30-12**	6"	2256	1477	142	Rp 3
SUPS 6-17-13	6"	1813	1094	142	Rp 2 ½	**SUPS 6-30-13**	6"	2352	1573	142	Rp 3
SUPS 6-17-14	6"	1904	1155	142	Rp 2 ½	**SUPS 6-30-14**	6"	2498	1669	142	Rp 3
SUPS 6-17-15	6"	1964	1215	142	Rp 2 ½	**SUPS 6-30-15**	6"	2594	1765	142	Rp 3
SUPS 6-17-16	6"	2025	1276	142	Rp 2 ½	**SUPS 6-30-16**	6"	2735	1861	142	Rp 3
SUPS 6-17-17	6"	2085	1336	142	Rp 2 ½	**SUPS 6-30-17**	6"	2831	1957	142	Rp 3

SUPS 6

Dimensions

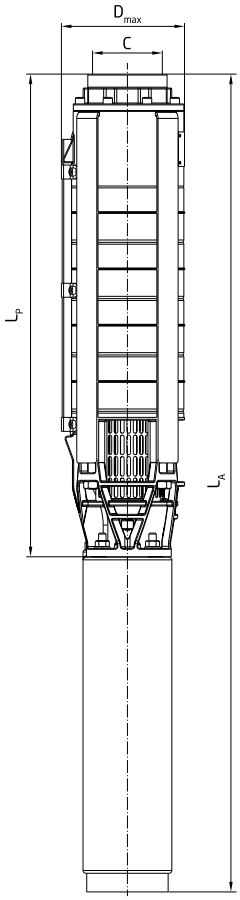

Type	Moto r Ø	L_A	L_P	D_{max}	C	Type	Motor Ø	L_A	L_P	D_{max}	C
SUPS 6-48-1	4"	807	451	150	Rp 3	**SUPS 6-60-1**	4"	807	451	150	Rp 3
SUPS 6-48-2	4"	987	564	150	Rp 3	**SUPS 6-60-2**	4"	1147	564	150	Rp 3
SUPS 6-48-3	6"	1407	708	150	Rp 3	**SUPS 6-60-3**	6"	1407	708	150	Rp 3
SUPS 6-48-4	6"	1540	821	150	Rp 3	**SUPS 6-60-4**	6"	1540	821	150	Rp 3
SUPS 6-48-5	6"	1653	934	150	Rp 3	**SUPS 6-60-5**	6"	1683	934	150	Rp 3
SUPS 6-48-6	6"	1796	1047	150	Rp 3	**SUPS 6-60-6**	6"	1826	1047	150	Rp 3
SUPS 6-48-7	6"	1939	1160	150	Rp 3	**SUPS 6-60-7**	6"	1989	1160	150	Rp 3
SUPS 6-48-8	6"	2102	1273	150	Rp 3	**SUPS 6-60-8**	6"	2147	1273	150	Rp 3
SUPS 6-48-9	6"	2260	1386	150	Rp 3	**SUPS 6-60-9**	6"	2305	1386	150	Rp 3
SUPS 6-48-10	6"	2373	1499	150	Rp 3	**SUPS 6-60-10**	6"	2418	1499	150	Rp 3
SUPS 6-48-11	6"	2531	1612	150	Rp 3	**SUPS 6-60-11**	6"	2621	1612	150	Rp 3
SUPS 6-48-12	6"	2644	1725	150	Rp 3	**SUPS 6-60-12**	6"	2734	1725	150	Rp 3
SUPS 6-48-13	6"	2847	1838	150	Rp 3	**SUPS 6-60-13**	6"	2952	1838	150	Rp 3
SUPS 6-48-14	6"	2960	1951	150	Rp 3	**SUPS 6-60-14**	6"	3065	1951	150	Rp 3
SUPS 6-48-15	6"	3073	2064	150	Rp 3	**SUPS 6-60-15**	6"	3178	2064	150	Rp 3
SUPS 6-48-16	6"	3291	2177	150	Rp 3	**SUPS 6-60-16**	6"	3391	2177	150	Rp 3
SUPS 6-48-17	6"	3404	2290	150	Rp 3	**SUPS 6-60-17**	6"	3504	2290	150	Rp 3
SUPS 6-48-18	6"	3617	2403	150	Rp 3	**SUPS 6-60-18**	6"	3697	2403	150	Rp 3
SUPS 6-48-19	6"	3730	2516	150	Rp 3	**SUPS 6-60-19**	6"	3810	2516	150	Rp 3
SUPS 6-48-20	6"	3843	2629	150	Rp 3	**SUPS 6-60-20**	6"	3923	2629	150	Rp 3
SUPS 6-48-21	6"	4036	2742	150	Rp 3						
SUPS 6-48-22	6"	4149	2855	150	Rp 3						
SUPS 6-48-23	6"	4262	2968	150	Rp 3						
SUPS 6-48-24	6"	4375	3081	150	Rp 3						

ACCESSORIES

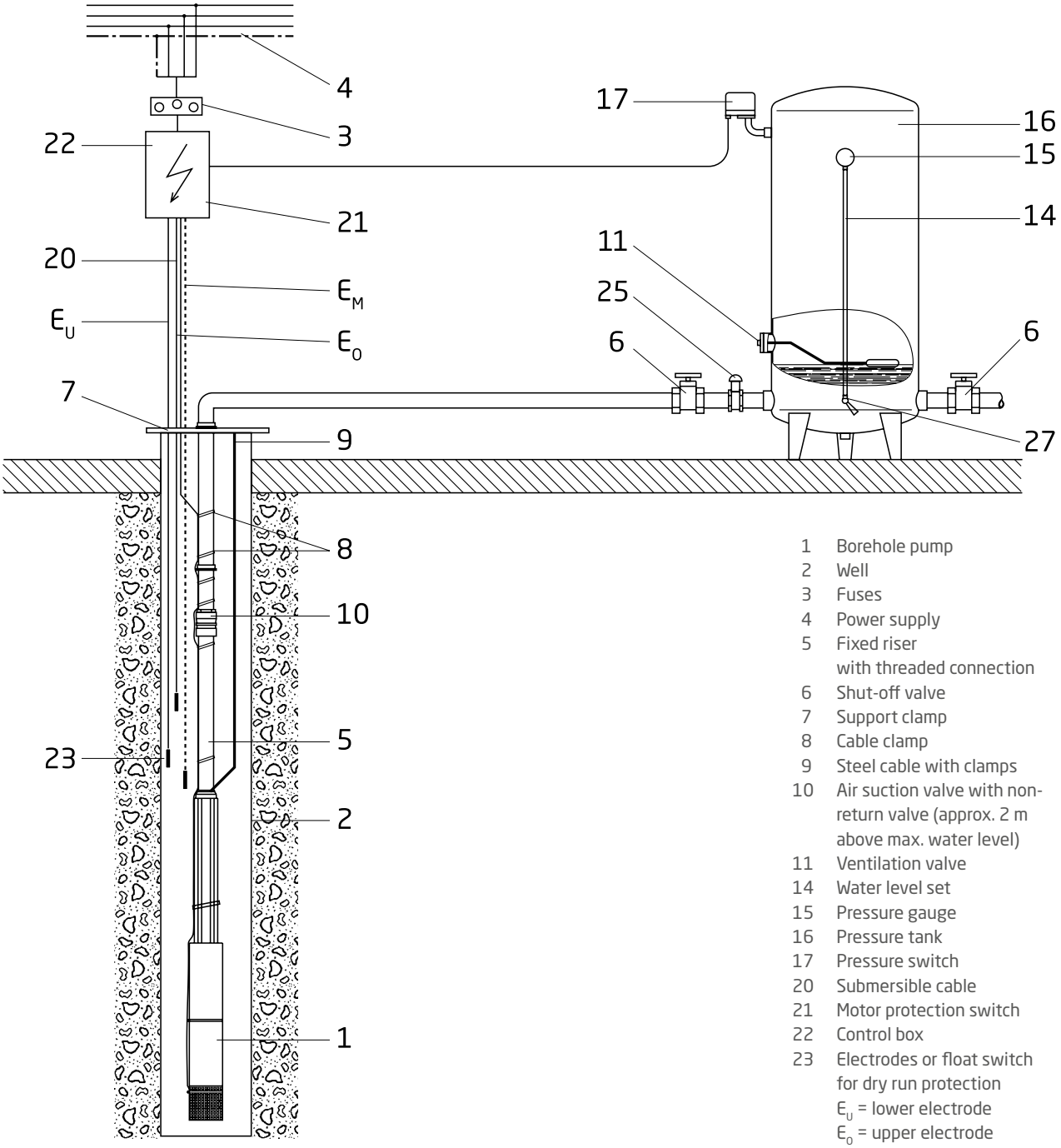

1 Borehole pump
2 Well
3 Fuses
4 Power supply
5 Fixed riser with threaded connection
6 Shut-off valve
7 Support clamp
8 Cable clamp
9 Steel cable with clamps
10 Air suction valve with non-return valve (approx. 2 m above max. water level)
11 Ventilation valve
14 Water level set
15 Pressure gauge
16 Pressure tank
17 Pressure switch
20 Submersible cable
21 Motor protection switch
22 Control box
23 Electrodes or float switch for dry run protection
E_U = lower electrode
E_0 = upper electrode
E_m = ground electrode
25 Safety valve
27 Air tap with car valve for manual tank ventilation

When using an air tap to automatically ventilate the pressure tank, the non-return valve in the pump must be removed or the valve seat must be drilled through as described in the operating manual.

ACCESSORIES

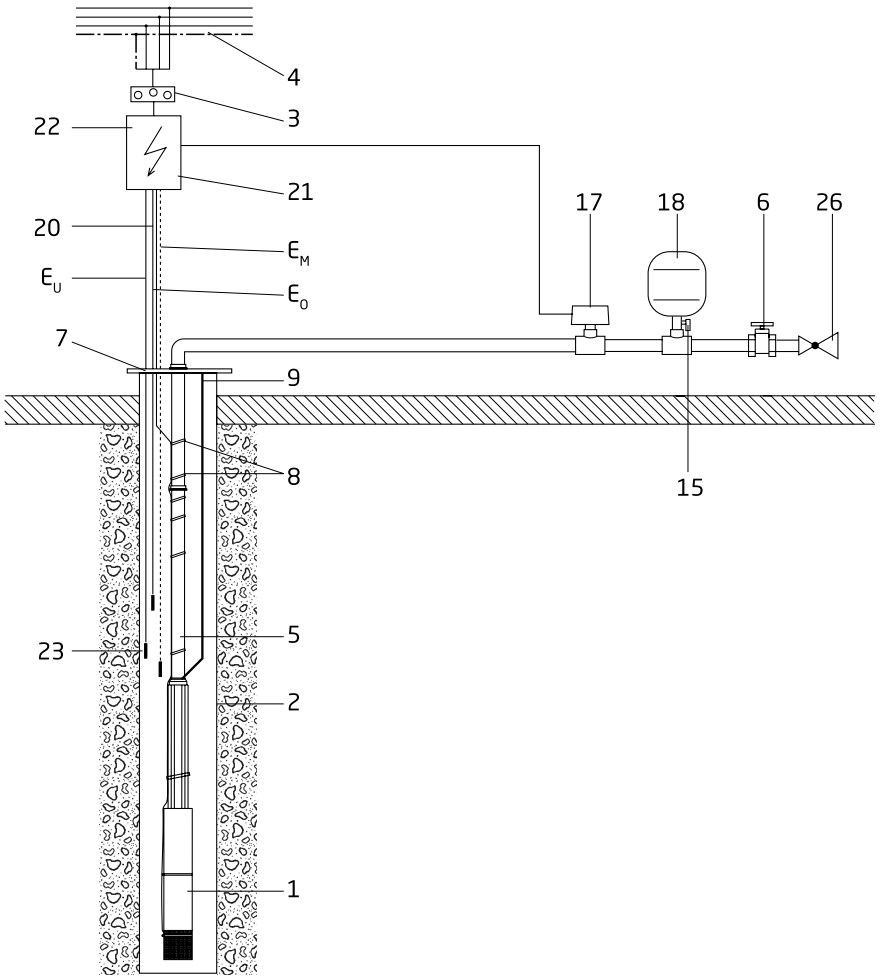

1 Borehole pump
2 Well
3 Fuses
4 Power supply
5 Fixed riser with threaded connection
6 Shut-off valve
7 Support clamp
8 Cable clamp
9 Steel cable with clamps
12 Cooling jacket
15 Pressure gauge
17 Pressure switch
18 Diaphragm pressure vessel
20 Submersible cable
21 Motor protection switch
22 Control box with follow-up relay
23 Electrodes or float switch for dry run protection
E_U = lower electrode
E_O = upper electrode
E_M = ground electrode
26 Pressure reducer

Installation diagram for a borehole pump in horizontal operation

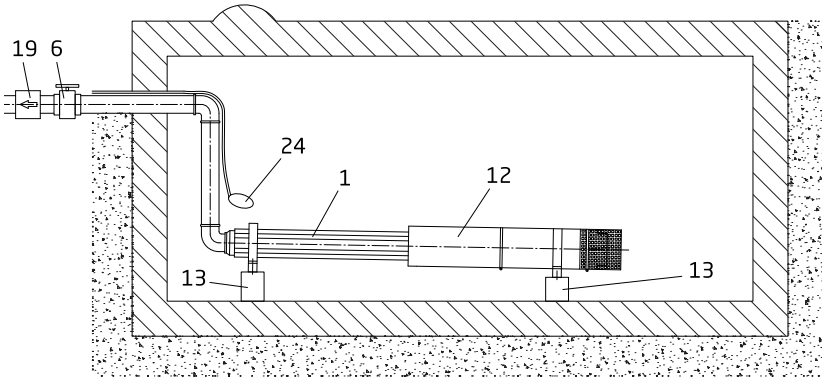

Design with float switch as dry run protection

All SUPS pumps are suitable for installation with cooling jackets, even those installed horizontally.

1 Install the pump with a slight incline
12 Cooling jacket (required for standing waters and longer run times)
13 Bearing block
19 Spring-loaded non-return valve*
24 Float switch as dry run protection
* (only in connection with speed regulation)

ACCESSORIES

Order information

Item no. in catalogue	Article/design	Connection	Article no.	Net RRP	Gross RRP
6	**Shut-off valve** PN 16, Ms	Rp ¾	507.2100.019	**12.94 €**	15.40 €
		Rp 1	507.2100.025	**21.60 €**	25.70 €
		Rp 1 ¼	507.2100.032	**31.34 €**	37.30 €
		Rp 1 ½	507.2100.038	**38.82 €**	46.20 €
		Rp 2	507.2100.050	**63.61 €**	75.70 €
7	**Support clamp**, galvanised, complete, for pipe	1 ¼"	510.0004.032	**121.85 €**	145.00 €
		1 ½"	510.0004.038	**122.69 €**	146.00 €
		2"	510.0004.050	**123.53 €**	147.00 €
		2 ½"	510.0004.065	**127.73 €**	152.00 €
		3"	510.0004.075	**190.76 €**	227.00 €
8	**Support clamp** (KTW approval) with button for pipe	1 ¼"-2 ½"	510.0003.032	**4.12 €**	4.90 €
8	**Roll support clamp band** with buttons	approx. 7.5 m	510.0003.999	**89.08 €**	106.01 €
9	**Stainless steel cable**, Ø 4 mm, AISI 316 (up to 200 kg)	per metre	510.0005.004	**2.10 €**	2.50 €
9	**Cable clamps**, 4 mm, AISI 316 (4 pcs required per cable)	per unit	510.0006.004	**2.02 €**	2.40 €
9	**Stainless steel cable**, Ø 6 mm, AISI 316	per metre	510.0005.006	**6.13 €**	7.29 €
9	**Cable clamps**, 6 mm, AISI 316 (4 pcs required per cable)	per unit	510.0006.006	**8.32 €**	9.90 €
12	**Cooling jacket**, SUPS 3	DN 100	510.0009.075	**242.86 €**	289.00 €
	Cooling jacket, SUPS 4, 0.25 kW, 0.37 kW, 0.55 kW 3~	DN 100	510.0009.402	**242.86 €**	289.00 €
	Cooling jacket, SUPS 4, 0.75 kW 3~, 0.55 kW 1~	DN 100	510.0009.407	**242.86 €**	289.00 €
	Cooling jacket, SUPS 4, 1.10 kW 3~, 0.75 kW 1~	DN 100	510.0009.411	**242.86 €**	289.00 €
	Cooling jacket, SUPS 4, 1.50 kW 3~, 1.10 kW 1~	DN 100	510.0009.415	**242.86 €**	289.00 €
	Cooling jacket, SUPS 4, 2.20 kW 3~, 1.50 kW 1~	DN 100	510.0009.422	**242.86 €**	289.00 €
	Cooling jacket, SUPS 4, 2.20 kW 1~	DN 100	510.0009.423	**242.86 €**	289.00 €
	Cooling jacket, SUPS 4, 3.00 kW	DN 100	510.0009.430	**242.86 €**	289.00 €
	Cooling jacket, SUPS 4, 3.70 kW	DN 100	510.0009.437	**242.86 €**	289.00 €
	Cooling jacket, SUPS 4, 4.00 kW	DN 100	510.0009.440	**242.86 €**	289.00 €
	Cooling jacket, SUPS 4, 5.50 kW	DN 100	510.0009.455	**242.86 €**	289.00 €
	Cooling jacket, SUPS 4, 7.50 kW	DN 100	510.0009.475	**242.86 €**	289.00 €
	Cooling jacket, SUPS 6-17, 0.55 kW	DN 150	510.0009.505	**345.38 €**	411.00 €
	Cooling jacket, SUPS 6-17+30, 1.10 kW	DN 150	510.0009.511	**345.38 €**	411.00 €
	Cooling jacket, SUPS 6-17+30, 2.20 kW	DN 150	510.0009.522	**345.38 €**	411.00 €
	Cooling jacket, SUPS 6-48+60, 2.20 kW	DN 150	510.0009.523	**345.38 €**	411.00 €
	Cooling jacket, SUPS 6-17+30, 3.00 kW	DN 150	510.0009.530	**345.38 €**	411.00 €
	Cooling jacket, SUPS 6-48, 3.00 kW	DN 150	510.0009.531	**345.38 €**	411.00 €
	Cooling jacket, SUPS 6-17+30, 4.00 kW	DN 150	510.0009.540	**345.38 €**	411.00 €
	Cooling jacket, SUPS 6-60, 4.00 kW	DN 150	510.0009.541	**345.38 €**	411.00 €
	Cooling jacket, SUPS 6-17+30, 5.50 kW; SUPI 6, 5.50 kW	DN 150	510.0009.655	**345.38 €**	411.00 €
	Cooling jacket, SUPS 6-48+60, 5.50 kW	DN 150	510.0009.656	**345.38 €**	411.00 €
	Cooling jacket, SUPS 6-17+30, 7.50 kW; SUPI 6, 7.50 kW	DN 150	510.0009.675	**345.38 €**	411.00 €
	Cooling jacket, SUPS 6-48+60, 7.50 kW	DN 150	510.0009.676	**345.38 €**	411.00 €
	Cooling jacket, SUPS 6-17+30, 9.30 kW; SUPI 6, 9.30 kW	DN 150	510.0009.693	**345.38 €**	411.00 €
	Cooling jacket, SUPS 6-48+60, 9.30 kW	DN 150	510.0009.694	**345.38 €**	411.00 €
	Cooling jacket, SUPS 6-17+30, 11.00 kW; SUPI 6, 11.00 kW	DN 150	510.0009.611	**345.38 €**	411.00 €
	Cooling jacket, SUPS 6-48+60, 11.00 kW	DN 150	510.0009.612	**345.38 €**	411.00 €
	Cooling jacket, SUPS 6-30, 15.00 kW; SUPI 6, 15.00 kW	DN 150	510.0009.615	**345.38 €**	411.00 €
	Cooling jacket, SUPS 6-48+60, 15.00 kW	DN 150	510.0009.616	**345.38 €**	411.00 €
	Cooling jacket, SUPI 6, 18.50 kW	DN 150	510.0009.619	**345.38 €**	411.00 €
	Cooling jacket, SUPS 6-48+60, 18.50 kW	DN 150	510.0009.618	**345.38 €**	411.00 €
	Cooling jacket, SUPI 6, 22.00 kW	DN 150	510.0009.623	**345.38 €**	411.00 €
	Cooling jacket, SUPS 6-48+60, 22.00 kW	DN 150	510.0009.622	**345.38 €**	411.00 €
	Cooling jacket, SUPI 6, 30.00 kW	DN 150	510.0009.631	**345.38 €**	411.00 €
	Cooling jacket, SUPS 6-48+60, 30.00 kW	DN 150	510.0009.630	**345.38 €**	411.00 €
	Cooling jacket, SUPS 6-48+60, 37.00 kW	DN 150	510.0009.637	**345.38 €**	411.00 €

ACCESSORIES

Order information

Item no. in catalogue	Article/design	Connection	Article no.	Net RRP	Gross RRP
13	**Set of bearing blocks** (2 pcs), stainless steel (horizontal installation) **for SUPS 3**		510.0010.075	**152.94 €**	182.00 €
	Set of bearing blocks (2 pcs), stainless steel (horizontal installation) **for SUPS 4, up to:** SUPS 4-2-42 SUPS 4-3-37 SUPS 4-5-42 SUPS 4-8-42 SUPS 4-14-13		510.0010.120	**212.61 €**	253.00 €
	Set of bearing blocks (3 pcs), stainless steel (horizontal installation) **from 1.30 m pump length, for SUPS 4 from:** SUPS 4-2-46 SUPS 4-3-44 SUPS 4-5-45 SUPS 4-8-46 SUPS 4-14-15		510.0010.121	**308.40 €**	367.00 €
	Set of bearing blocks (2 pcs), stainless steel (horizontal installation) **for SUPS 6, up to:** SUPS 6-17-19 SUPS 6-30-12		510.0010.160	**308.40 €**	367.00 €
	Set of bearing blocks (2 pcs), stainless steel (horizontal installation) **for SUPS 6 up to:** SUPS 6-48-9 SUPS 6-60-9		510.0010.161	**308.40 €**	367.00 €
	Set of bearing blocks (3 pcs), stainless steel (horizontal installation) **from 1.50 m pump length, for SUPS 6 from:** SUPS 6-17-20 SUPS 6-30-13		510.0010.162	**384.87 €**	458.00 €
	Set of bearing blocks (3 pcs), stainless steel (horizontal installation) **from 1.50 m pump length, for SUPS 6 from:** SUPS 6-48-10 SUPS 6-60-10		510.0010.163	**384.87 €**	458.00 €
14	**Light water level set**, Ms, complete, up to PN 6 including pressure gauge 0 - 6 bar, Ø 63 mm water level taps, R ½ drain tap, R ¼, including:	R ½			
	Sight tube, 0.7 m long or		507.3200.000	**121.85 €**	145.00 €
	Sight tube, 1.0 m long		507.3210.000	**121.85 €**	145.00 €
14	**Heavy water level set**, Ms, complete, up to PN 10 including pressure gauge 0 - 10 bar, Ø 80 mm water level taps, R ½ pressure gauge three-way tap with test flange drain tap, R ¼, including:	R ½			
	Glass tube and protective tube 0.5 m long		507.3320.000	**258.82 €**	308.00 €
	Glass tube and protective tube 0.7 m long		507.3300.000	**258.82 €**	308.00 €
	Glass tube and protective tube 1.0 m long		507.3310.000	**258.82 €**	308.00 €
15	**Pressure gauge** Ø 63 mm, 0 - 6 bar	R ¼	507.6122.006	**6.47 €**	7.70 €
	Ø 63 mm, 0 - 10 bar	R ¼	507.6122.010	**6.47 €**	7.70 €
	Ø 80 mm, 0 - 10 bar	R ½	507.6132.010	**16.13 €**	19.20 €
	Ø 80 mm, 0 - 25 bar	R ½	507.6132.025	**16.13 €**	19.20 €
15	**Pressure gauge tap**	R ½	507.3200.004	**37.98 €**	45.20 €
19	**Non-return valve** PN 16, Ms	Rp 1	507.2300.025	**47.48 €**	56.50 €
		Rp 1 ¼	507.2300.032	**64.71 €**	77.00 €
		Rp 1 ½	507.2300.038	**103.36 €**	123.00 €
		Rp 2	507.2300.050	**179.83 €**	214.00 €

ACCESSORIES

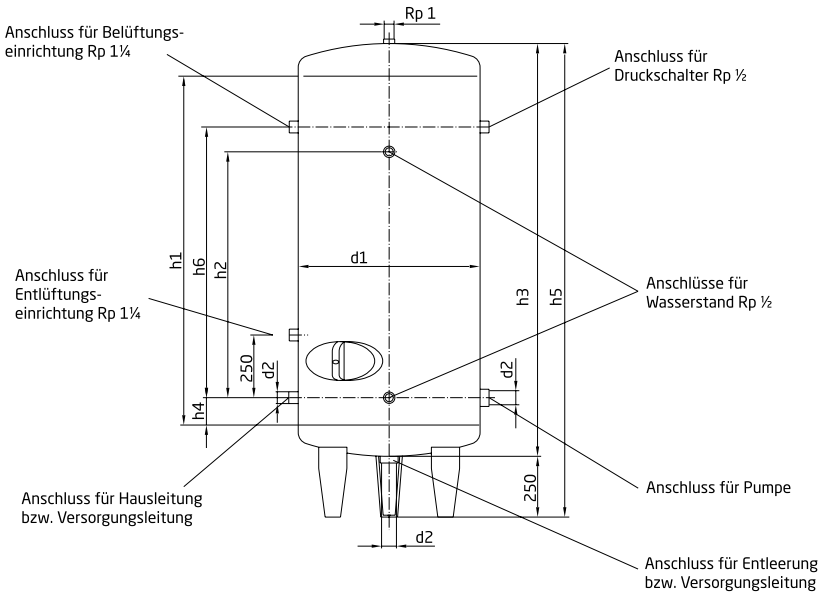

Pressure vessel dimensions

Nominal capacity litres	d1	d2	h1 +25/-0	h2 +/-5	h3 max.	h4 +/-3	h5 max.	h6 +/-5
150	450	Rp 2	790	500	1055	85	1275	500
300	550	Rp 2	1100	700	1405	85	1625	675
500	650	Rp 2	1310	700	1655	85	1875	800
750	800	Rp 2	1250	700	1665	85	1885	800
1000	800	Rp 2	1750	1000	2165	85	2385	1050
1500	1000	Rp 3	1560	1000	2060	120	2280	1000
2000	1100	Rp 3	1770	1000	2315	120	2535	1125
3000	1150	Rp 3	2500	1000	3085	120	3305	1500

Order information

Item no. in catalogue	Article/design	Litre	Weight (kg)	Article no.	Net RRP	Gross RRP
16	**Pressure vessel according to DIN 4810** – galvanised and including factory certification					
	6 bar	**150**	46.00	504.8600.150	**432.77 €**	515.00 €
		300	69.00	504.8600.300	**538.66 €**	641.00 €
		500	108.00	504.8600.500	**731.93 €**	871.00 €
		750	155.00	504.8600.750	**1,108.40 €**	1,319.00 €
		1000	192.00	504.8601.000	**1,358.82 €**	1,617.00 €
		1500	312.00	504.8601.500	**3,469.75 €**	4,129.00 €
		2000	382.00	504.8602.000	**4,222.69 €**	5,025.00 €
		3000	494.00	504.8603.000	**5,132.77 €**	6,108.00 €
	10 bar	**150**	54.00	504.8000.150	**799.16 €**	951.00 €
		300	92.00	504.8000.300	**1,031.09 €**	1,227.00 €
		500	141.00	504.8000.500	**1,263.87 €**	1,504.00 €
		750	200.00	504.8000.750	**1,614.29 €**	1,921.00 €
		1000	249.00	504.8001.000	**2,097.48 €**	2,496.00 €
		1500	414.00	504.8001.500	**3,915.97 €**	4,660.00 €
		2000	508.00	504.8002.000	**4,500.00 €**	5,355.00 €
		3000	701.00	504.8003.000	**5,529.41 €**	6,580.00 €

ACCESSORIES

Order information

Item no. in catalogue	Article/design					
17	**Pressure switch**, single pole, protection class IP 54					
	Type	**Settings range**	**Connection**	**Article no.**	**Net RRP**	**Gross RRP**
	FF 4-2 DAH	- max. 2 bar	Rp ⅜	500.8200.001	**94.96 €**	113.00 €
	FF 4-4 DAH	- max. 4 bar	Rp ⅜	500.8200.002	**95.80 €**	114.00 €
	FF 4-8 DAH	- max. 8 bar	Rp ⅜	500.8200.003	**99.16 €**	118.00 €
	FF 4-16 DAH	- max. 16 bar	Rp ⅜	500.8200.004	**106.72 €**	127.00 €
	FF 4-32 DAH	- max. 32 bar	Rp ⅜	500.8200.005	**117.65 €**	140.00 €
Item no. in catalogue	**Article/design**					
17	**Pressure switch**, three pole, protection class IP 55					
	Type	**Settings range**	**Connection**	**Article no.**	**Net RRP**	**Gross RRP**
	MDR 5/5 (preset 1.5 - 3 bar)	- max. 5 bar	Rp ½	500.8100.001	**42.10 €**	50.10 €
	MDR 5/5 (preset 2 - 4 bar)	- max. 5 bar	Rp ½	500.8100.011	**42.10 €**	50.10 €
	MDR 5/8	- max. 8 bar	Rp ½	500.8100.002	**60.42 €**	71.90 €
	MDR 5/11	- max. 11 bar	Rp ½	500.8100.003	**127.73 €**	152.00 €
	MDR 5/16	- max. 16 bar	Rp ½	500.8100.004	**142.02 €**	169.00 €
Item no. in catalogue	**Article/design**					
18	**Diaphragm pressure vessel** with food quality diaphragm, inner coating and foot valve, preloaded: approx. 10 % under starting pressure.					
	Type		**Connection**	**Article no.**	**Net RRP**	**Gross RRP**
	DD 8, 8 l, max. 16 bar		R ¾	505.4100.008	**74.54 €**	88.70 €
	DD 8, 8 l, max. 25 bar		R ¾	505.4200.008	**154.62 €**	184.00 €
	DD 18, 18 l, max. 10 bar		R ¾	505.4100.018	**93.28 €**	111.00 €
	Flow fitting for diaphragm pressure vessel above		R ¾	505.4100.009	**37.82 €**	45.00 €
Item no. in catalogue	**Article/design**					
18	**Diaphragm pressure vessel** with food quality diaphragm, inner coating and foot valve, with mounting brackets for wall assembly.					
	Type		**Connection**	**Article no.**	**Net RRP**	**Gross RRP**
	ADF 50.10, 50 l, max. 10 bar		R 1 x R 1	505.5300.051	**547.90 €**	652.00 €
	ADF 80.10, 80 l, max. 10 bar		R 1 x R 1	505.5300.081	**727.73 €**	866.00 €

See page 28 for larger diaphragm pressure vessels.

ACCESSORIES

Order information

Item no. in catalogue	Article/design			
20	**Submersible cable for drinking water**, type Hydrofirm T, blue, only available in 5 m stages			
	Type	**Article no.**	**Net RRP**	**Gross RRP**
	4 x 1.5 mm²	510.0002.415	**3.28 €**	3.90 €
	4 x 2.5 mm²	510.0002.425	**4.96 €**	5.90 €
	4 x 4.0 mm²	510.0002.440	**6.55 €**	7.80 €
	4 x 6.0 mm²	510.0002.460	**12.94 €**	15.40 €
	4 x 10.0 mm²	510.0002.490	**24.62 €**	29.30 €
	4 x 16.0 mm²	510.0002.491	**31.93 €**	38.00 €
	Cable connection, max. 2.5 mm² up to 4 kW	510.5000.020	**61.18 €**	72.80 €
	Cable connection, max. 6 mm² up to 15 kW	510.5000.050	**33.36 €**	39.70 €
	Cable connection, max. 16 mm²	510.5000.022	**235.29 €**	280.00 €
	Cable set for 4" motors, 4 x 1.5 mm², 5 m	510.5015.005	**79.16 €**	94.20 €
	Cable set for 4" motors, 4 x 1.5 mm², 10 m	510.5015.010	**95.80 €**	114.00 €
	Cable set for 4" motors, 4 x 1.5 mm², 15 m	510.5015.015	**111.76 €**	133.00 €
	Cable set for 4" motors, 4 x 1.5 mm², 20 m	510.5015.020	**128.57 €**	153.00 €
	Cable set for 4" motors, 4 x 1.5 mm², 25m	510.5015.025	**144.54 €**	172.00 €
	Cable set for 4" motors, 4 x 1.5 mm², 30 m	510.5015.030	**160.50 €**	191.00 €
	Cable set for 4" motors, 4 x 1.5 mm², 35 m	510.5015.035	**177.31 €**	211.00 €
	Cable set for 4" motors, 4 x 1.5 mm², 40 m	510.5015.040	**193.28 €**	230.00 €
	Cable set for 4" motors, 4 x 1.5 mm², 45 m	510.5015.045	**209.24 €**	249.00 €
	Cable set for 4" motors, 4 x 1.5 mm², 50 m	510.5015.050	**226.05 €**	269.00 €
	Cable set for 4" motors, 4 x 1.5 mm², 55 m	510.5015.055	**242.02 €**	288.00 €
	Cable set for 4" motors, 4 x 1.5 mm², 60 m	510.5015.060	**257.98 €**	307.00 €
	Cable set for 4" motors, 4 x 2.5 mm², 5 m	510.5025.005	**87.39 €**	104.00 €
	Cable set for 4" motors, 4 x 2.5 mm², 10 m	510.5025.010	**111.76 €**	133.00 €
	Cable set for 4" motors, 4 x 2.5 mm², 15 m	510.5025.015	**136.97 €**	163.00 €
	Cable set for 4" motors, 4 x 2.5 mm², 20 m	510.5025.020	**161.34 €**	192.00 €
	Cable set for 4" motors, 4 x 2.5 mm², 25 m	510.5025025	**186.55 €**	222.00 €
	Cable set for 4" motors, 4 x 2.5 mm², 30 m	510.5025.030	**210.92 €**	251.00 €
	Cable set for 4" motors, 4 x 2.5 mm², 35 m	510.5025.035	**236.13 €**	281.00 €
	Cable set for 4" motors, 4 x 2.5 mm², 40 m	510.5025.040	**259.66 €**	309.00 €
	Cable set for 4" motors, 4 x 2.5 mm², 45 m	510.5025.045	**284.87 €**	339.00 €
	Cable set for 4" motors, 4 x 2.5 mm², 50 m	510.5025.050	**310.08 €**	369.00 €
	Cable set for 4" motors, 4 x 2.5 mm², 55 m	510.5025.055	**333.61 €**	397.00 €
	Cable set for 4" motors, 4 x 2.5 mm², 60 m	510.5025.060	**359.66 €**	428.00 €

Item no. in catalogue	Article/design				
21	**Motor protection switch**, thermal and magnetic, (not required if complete control box [22] is delivered)				
	Type	**Settings range (A)**	**Motor performance (kW)**	**Article no.**	**Net RRP**	**Gross RRP**
	MKE 2, plastic enclosed	-1.60	0.37	510.0050.016	**80.92 €**	96.30 €
	for 3~ 400 V	-2.50	0.55 - 0.75	510.0050.025	**80.92 €**	96.30 €
		-4.00	1.10 - 1.50	510.0050.040	**80.92 €**	96.30 €
		-6.30	2.20	510.0050.063	**80.92 €**	96.30 €
		-10.00	4.00	510.0050.100	**97.48 €**	116.00 €
		-16.00	5.50	510.0050.160	**97.48 €**	116.00 €
		-25.00	7.50 - 11.00	510.0050.250	**101.68 €**	121.00 €
		-40.00	15.00 - 18.50	510.0050.400	**213.45 €**	254.00 €
		-47.00	22.00	510.0050.500	**248.74 €**	296.00 €

ACCESSORIES

Order information

Item no. in catalogue	Article/design
22	**Control box, type SUP-A/B/C/D, for three phase or single phase supply,** **dry run protection via electrodes, relating to SUP-A or SUP-C** **dry run protection via float switch, relating to SUP-B or SUP-D** **without follow-up for pump, for pressure vessel operation, relating to SUP-A or SUP-B** **with follow-up for pump, for diaphragm pressure vessel operation, relating to SUP-C or SUP-D** Operating voltage 3~ 400 V or 1~ 230 V, 50 Hz, control voltage 230 V, 50 Hz, plastic or steel enclosed, consisting of: 1 control box housing, protection class IP 54 1 air protection for direct start or star-delta combination 1 motor protection switch, thermal and magnetic 1 connection for pressure switch 1 on/off switch 1 control fuse

Item no. in catalogue	Article/design
22	**Control box, type SUP-A, for single-phase supply,** **dry run protection via electrodes,** **without follow-up for pump.** Operating voltage 3~ 400 V, 50 Hz, control voltage 230 V, 50 Hz plastic enclosed (steel enclosed at star-delta start)

		Settings range (A)	Motor performance (kW)	Article no.	Net RRP	Gross RRP
	Direct start	-1.25	0.37	510.0051.012	**368.07 €**	438.00 €
		-1.60	0.55	510.0051.016	**368.07 €**	438.00 €
		-2.50	0.75	510.0051.025	**368.07 €**	438.00 €
		-4.00	1.10	510.0051.040	**368.07 €**	438.00 €
		-5.00	1.50	510.0051.050	**368.07 €**	438.00 €
		-8.00	2.20 - 3.00	510.0051.060	**368.07 €**	438.00 €
		-12.50	3.70 - 4.00	510.0051.100	**384.03 €**	457.00 €
		-16.00	5.50	510.0051.161	**395.80 €**	471.00 €
		-20.00	7.50	510.0051.200	**400.84 €**	477.00 €
	Dimensions (L x B x H): 240 x 160 x 160 mm					
	Star-delta start	-16.00	5.50	510.0051.160	**882.35 €**	1,050.00 €
		-20.00	7.50	510.0051.250	**888.24 €**	1,057.00 €
		-25.00	9.30 - 11.00	510.0051.251	**1,127.73 €**	1,342.00 €
		-40.00	15.00 - 18.50	510.0051.400	**1,374.79 €**	1,636.00 €
		-50.00	22.00	510.0051.500	**1,406.72 €**	1,674.00 €
	Dimensions (L x B x H): 500 x 400 x 200 mm					

ACCESSORIES

Order information

Item no. in catalogue	Article/design					
22	**Control box, type SUP-B, for three phase supply, dry run protection via float switch, without follow-up for pump.** Operating voltage 3~ 400 V, 50 Hz, control voltage 230 V, 50 Hz plastic enclosed (steel enclosed at star-delta start)					
		Settings range (A)	**Motor performance (kW)**	**Article no.**	**Net RRP**	**Gross RRP**
	Direct start	-1.25	0.37	510.0053.012	**236.13 €**	281.00 €
		-1.60	0.55	510.0053.016	**236.13 €**	281.00 €
		-2.50	0.75	510.0053.025	**236.13 €**	281.00 €
		-4.00	1.10	510.0053.040	**236.13 €**	281.00 €
		-5.00	1.50	510.0053.050	**236.13 €**	281.00 €
		-8.00	2.20 - 3.00	510.0053.060	**236.13 €**	281.00 €
		-12.50	3.70 - 4.00	510.0053.100	**251.26 €**	299.00 €
		-16.00	5.50	510.0053.161	**294.96 €**	351.00 €
		-20.00	7.50	510.0053.200	**297.48 €**	354.00 €
	Dimensions (L x B x H): 240 x 160 x 160 mm					
	Star-delta start	-16.00	5.50	510.0053.160	**780.67 €**	929.00 €
		-20.00	7.50	510.0053.250	**787.39 €**	937.00 €
		-25.00	9.30 - 11.00	510.0053.251	**1,031.09 €**	1,227.00 €
		-40.00	15.00 - 18.50	510.0053.400	**1,278.15 €**	1,521.00 €
		-50.00	22.00	510.0053.500	**1,304.20 €**	1,552.00 €
	Dimensions (L x B x H): 500 x 400 x 200 mm					

Item no. in catalogue	Article/design					
22	**Control box, type SUP-C, for three phase supply, dry run protection via electrodes, with follow-up for pump.** Operating voltage 3~ 400 V, 50 Hz, control voltage 230 V, 50 Hz plastic enclosed (steel enclosed at star-delta start)					
		Settings range (A)	**Motor performance (kW)**	**Article no.**	**Net RRP**	**Gross RRP**
	Direct start	-1.25	0.37	510.0055.012	**478.15 €**	569.00 €
		-1.60	0.55	510.0055.016	**478.15 €**	569.00 €
		-2.50	0.75	510.0055.025	**478.15 €**	569.00 €
		-4.00	1.10	510.0055.040	**478.15 €**	569.00 €
		-5.00	1.50	510.0055.050	**478.15 €**	569.00 €
		-8.00	2.20 - 3.00	510.0055.060	**478.15 €**	569.00 €
		-12.50	3.70 - 4.00	510.0055.100	**494.12 €**	588.00 €
		-16.00	5.50	510.0055.161	**506.72 €**	603.00 €
		-20.00	7.50	510.0055.200	**511.76 €**	609.00 €
	Dimensions (L x B x H): 240 x 160 x 160 mm					
	Star-delta start	-16.00	5.50	510.0055.160	**947.90 €**	1,128.00 €
		-20.00	7.50	510.0055.250	**954.62 €**	1,136.00 €
		-25.00	9.30 - 11.00	510.0055.251	**1,183.19 €**	1,408.00 €
		-40.00	15.00 - 18.50	510.0055.400	**1,427.73 €**	1,699.00 €
		-50.00	22.00	510.0055.500	**1,471.43 €**	1,751.00 €
	Dimensions (L x B x H): 500 x 400 x 200 mm					

ACCESSORIES

Order information

Item no. in catalogue	Article/design				Net RRP	Gross RRP
22	**Control box, type SUP-D, for three phase supply, dry run protection via float switch, with follow-up for pump.** Operating voltage 3~ 400 V, 50 Hz, control voltage 230 V, 50 Hz plastic enclosed (steel enclosed at star-delta start)					
		Settings range (A)	**Motor performance (kW)**	**Article no.**		
	Direct start	-1.25	0.37	510.0057.012	**319.33 €**	380.00 €
		-1.60	0.55	510.0057.016	**319.33 €**	380.00 €
		-2.50	0.75	510.0057.025	**319.33 €**	380.00 €
		-4.00	1.10	510.0057.040	**319.33 €**	380.00 €
		-5.00	1.50	510.0057.050	**319.33 €**	380.00 €
		-8.00	2.20 - 3.00	510.0057.060	**319.33 €**	380.00 €
		-12.50	3.70 - 4.00	510.0057.100	**334.45 €**	398.00 €
		-16.00	5.50	510.0057.161	**345.38 €**	411.00 €
		-20.00	7.50	510.0057.200	**351.26 €**	418.00 €
	Dimensions (L x B x H): 240 x 160 x 160 mm					
	Star-delta start	-16.00	5.50	510.0057.160	**847.06 €**	1,008.00 €
		-20.00	7.50	510.0057.250	**852.94 €**	1,015.00 €
		-25.00	9.30 - 11.00	510.0057.251	**1,086.55 €**	1,293.00 €
		-40.00	15.00 - 18.50	510.0057.400	**1,331.93 €**	1,585.00 €
		-50.00	22.00	510.0057.500	**1,369.75 €**	1,630.00 €
	Dimensions (L x B x H): 500 x 400 x 200 mm					

Item no. in catalogue	Article/design	Article no.	Net RRP	Gross RRP
22	**Control box, type SUP-A, for single-phase supply, dry run protection via electrodes, with follow-up for pump.** Operating voltage 1~ 230 V, 50 Hz, control voltage 230 V, 50 Hz plastic enclosed Dimensions (L x B x H): 240 x 160 x 160 mm	510.0052.060	**301.68 €**	359.00 €

Item no. in catalogue	Article/design	Article no.	Net RRP	Gross RRP
22	**Control box, type SUP-B, for single-phase supply, dry run protection via float switch, without follow-up for pump.** Operating voltage 1~ 230 V, 50 Hz, control voltage 230 V, 50 Hz plastic enclosed Dimensions (L x B x H): 240 x 160 x 160 mm	510.0054.060	**159.66 €**	190.00 €

Item no. in catalogue	Article/design	Article no.	Net RRP	Gross RRP
22	**Control box, type SUP-C, for single-phase supply, dry run protection via electrodes, with follow-up for pump.** Operating voltage 1~ 230 V, 50 Hz, control voltage 230 V, 50 Hz plastic enclosed Dimensions (L x B x H): 240 x 160 x 160 mm	510.0056.060	**405.88 €**	483.00 €

Item no. in catalogue	Article/design	Article no.	Net RRP	Gross RRP
22	**Control box, type SUP-D, for single-phase supply, dry run protection via float switch, with follow-up for pump.** Operating voltage 1~ 230 V, 50 Hz, control voltage 230 V, 50 Hz plastic enclosed Dimensions (L x B x H): 240 x 160 x 160 mm	510.0058.060	**259.66 €**	309.00 €

ACCESSORIES

Order information

Article/design	Article no.	Net RRP	Gross RRP
Larger ISO control box	560.6005.070	**53.95 €**	64.20 €
Larger steel control box 400x400x200	560.6005.071	**391.60 €**	466.00 €
Larger steel control box 500x400x200	560.6005.072	**76.39 €**	90.90 €
Larger steel control box 500x500x200	560.6005.073	**76.39 €**	90.90 €
Larger steel control box 600x400x200	560.6005.074	**76.39 €**	90.90 €
Larger steel control box 600x600x200	560.6005.075	**76.39 €**	90.90 €
Larger steel control box 700x500x250	560.6005.076	**137.82 €**	164.00 €
Larger steel control box 800x600x200	560.6005.077	**137.82 €**	164.00 €
Larger steel control box 1000x800x300	560.6005.078	**137.82 €**	164.00 €
Soft starter up to 12.5 A	560.6006.001	**125.21 €**	149.00 €
Soft starter up to 17.6 A	560.6006.011	**164.70 €**	196.00 €
Soft starter up to 25.0 A	560.6006.021	**210.08 €**	250.00 €
Soft starter up to 32.0 A	560.6006.031	**264.70 €**	315.00 €
Soft starter up to 45.0 A	560.6006.041	**310.08 €**	369.00 €
Soft starter up to 63.0 A	560.6006.051	**369.75 €**	440.00 €
Soft starter up to 80.0 A	560.6006.061	**457.98 €**	545.00 €
Light indicator, 230 V, white (operation)	560.6001.001	**42.77 €**	50.90 €
Light indicator, 230 V, red (overvoltage)	560.6001.002	**42.77 €**	50.90 €
Light indicator, 230 V, red (water message)	560.6001.003	**42.77 €**	50.90 €
Light indicator, 230 V, red (flooding)	560.6001.004	**42.77 €**	50.90 €
Light indicator, 230 V, red (error)	560.6001.005	**42.77 €**	50.90 €
Light indicator, 230 V, white (ball valve open)	560.6001.006	**42.77 €**	50.90 €
Light indicator, 230 V, white (ball valve closed)	560.6001.007	**42.77 €**	50.90 €
Light indicator, 230 V, white (magnetic valve open)	560.6001.008	**42.77 €**	50.90 €
Light indicator, 230 V, green (ready for operation)	560.6001.009	**42.77 €**	50.90 €
Potential-free contact (operation)	560.6002.001	**42.77 €**	50.90 €
Potential-free contact (overvoltage)	560.6002.002	**42.77 €**	50.90 €
Potential-free contact (water message)	560.6002.003	**42.77 €**	50.90 €
Potential-free contact (flooding)	560.6002.004	**42.77 €**	50.90 €
Potential-free contact (error)	560.6002.005	**42.77 €**	50.90 €
Potential-free contact (ball valve open)	560.6002.006	**42.77 €**	50.90 €
Potential-free contact (magnetic valve open)	560.6002.007	**42.77 €**	50.90 €
Selector switch manual-0-automatic (locking)	560.6003.001	**42.77 €**	50.90 €
Selector switch manual-0-automatic (non-locking)	560.6003.002	**42.77 €**	50.90 €
Key switch manual-0-automatic	560.6003.003	**63.11 €**	75.10 €
Key switch manual-0-on-off	560.6003.004	**78.40 €**	93.30 €
Electrode relay	560.6004.001	**172.27 €**	205.00 €
Phase sequence relay with light indicator	560.6004.011	**141.18 €**	168.00 €
Interface relay for external start/stop signal	560.6004.021	**60.08 €**	71.50 €
Flow sensor incl. 5 m cable	560.6004.031	**781.51 €**	930.00 €
Timer, analogue	560.6004.041	**110.08 €**	131.00 €
Timer, digital, 1 channel	560.6004.042	**211.76 €**	252.00 €
Contact sensor	560.6004.051	**110.92 €**	132.00 €
Operating hour meter, analogue	560.6005.021	**110.08 €**	131.00 €
Heating, 20 Watt, with thermostat	560.6005.031	**100.00 €**	119.00 €
Transformer 400/24 V, 63 VA, incl.	560.6005.041	**199.16 €**	237.00 €
Horn off button	560.6005.051	**55.97 €**	66.60 €
Logo control with display	560.6005.061	**1.304.20 €**	1.552.00 €

ACCESSORIES

Order information

Item no. in catalogue	Article/design	Article no.	Net RRP	Gross RRP
23	**Dry run protection via electrodes**, assembled completely, 3 units required			
	with 5 m cable	510.0060.005	**50.75 €**	60.40 €
	with 10 m cable	510.0060.010	**61.75 €**	73.50 €
	with 15 m cable	510.0060.015	**67.22 €**	80.00 €
	with 20 m cable	510.0060.020	**72.77 €**	86.60 €
	with 25 m cable	510.0060.025	**78.23 €**	93.10 €
	with 30 m cable	510.0060.030	**83.78 €**	99.70 €
	with 35 m cable	510.0060.035	**89.24 €**	106.20 €
	with 40 m cable	510.0060.040	**94.79 €**	112.80 €
	with 45 m cable	510.0060.045	**100.25 €**	119.30 €
	with 50 m cable	510.0060.050	**89.08 €**	106.00 €
	Matching control box: type SUP-A+C			
24	**Dry run protection via float switch**, single pole, red			
	with 3 m cable	500.8400.001	**22.69 €**	27.00 €
	with 5 m cable	500.8400.002	**27.06 €**	32.20 €
	with 10 m cable	500.8400.003	**37.82 €**	45.00 €
	with 15 m cable	500.8400.004	**48.49 €**	57.70 €
	with 20 m cable	500.8400.005	**59.41 €**	70.70 €
	Passende Schaltkästen: Typ SUP-B+D			
24	**Filling via float switch**, single pole, yellow			
	with 3 m cable	500.8400.011	**22.69 €**	27.00 €
	with 5 m cable	500.8400.012	**27.06 €**	32.20 €
	with 10 m cable	500.8400.013	**37.82 €**	45.00 €
	with 15 m cable	500.8400.014	**48.49 €**	57.70 €
	with 20 m cable	500.8400.015	**59.41 €**	70.70 €
	Matching control box: type SUP-B+D			
25	**Proportional safety valve** no. 652 made from gunmetal, component inspection drawing 293. Discharge capacity at 10 % excess pressure:			

		(bar)	1	2	3	4	5	6	7	8			
	(m³/h)	½"	1.51	2.14	2.62	3.02	3.38	3.70	3.99	4.27	504.0000.013	**147.06 €**	175.00 €
	Water	¾"	2.55	3.61	4.42	5.10	5.71	6.25	6.75	7.22	504.0000.019	**159.66 €**	190.00 €
		1"	3.87	5.47	6.69	7.73	8.64	9.47	10.23	10.93	504.0000.025	**169.75 €**	202.00 €
		1 ¼"	4.89	6.92	8.47	9.78	10.94	11.98	12.94	13.84	504.0000.032	**236.97 €**	282.00 €
		1 ½"	7.31	10.33	12.66	14.62	16.34	17.90	19.33	20.67	504.0000.038	**373.95 €**	445.00 €
		2"	9.44	13.35	16.34	18.87	21.10	23.11	24.97	26.69	504.0000.050	**483.19 €**	575.00 €
		(bar)	9	10	11	12	13	14	15	16			
	(m³/h)	½"	4.53	4.77	2.78	2.91	3.02	3.14	3.25	3.36	504.0000.013	**147.06 €**	175.00 €
	Water	¾"	7.65	8.07	6.82	7.12	7.41	7.69	7.96	8.22	504.0000.019	**159.66 €**	190.00 €
		1"	11.60	12.22	12.82	13.39	13.94	14.46	14.97	15.46	504.0000.025	**169.75 €**	202.00 €
		1 ¼"	14.68	15.47	14.42	15.06	15.68	16.27	16.84	17.39	504.0000.032	**236.97 €**	282.00 €
		1 ½"	21.92	23.11	23.56	24.61	25.62	26.58	27.52	28.42	504.0000.038	**373.95 €**	445.00 €
		2"	28.31	29.84	31.30	32.69	34.02	35.31	36.55	37.75	504.0000.050	**483.19 €**	575.00 €

26	**Pressure reducer** with balanced single-seat valve, built-in dirt trap and transparent strainer cup (design A) or brass strainer cup (design B), housing and screws made from brass, static pressure max. 25 bar, back pressure 1.5 - 6 bar = design A back pressure 1.5 - 12 bar = design B			
	R 1 ¼, design A, Q max.= 6.00 m³/h	504.4100.032	**228.57 €**	272.00 €
	R 1 ¼, design B, Q max.= 6.00 m³/h	504.4200.032	**328.57 €**	391.00 €
	R 1 ½, design A, Q max.= 9.00 m³/h	504.4100.038	**400.00 €**	476.00 €
	R 1 ½, design B, Q max.= 9.00 m³/h	504.4200.038	**614.29 €**	731.00 €
	R 2, design A, Q max.= 12.00 m³/h	504.4100.050	**487.39 €**	580.00 €
	R 2, design B, Q max.= 12.00 m³/h	504.4200.050	**657.14 €**	782.00 €
	Pressure gauge for pressure reducer, R¼, connection at rear, 0 - 10 bar, Ø 63 mm	507.6121.010	**6.47 €**	7.70 €
27	**Air tap** with car valve for manual vessel ventilation, R ¼	507.2900.007	**23.78 €**	28.30 €

ACCESSORIES

Design with SUP-C control box and 3 electrodes as dry < run protection

Order information

Item no. in catalogue	Article/design	Article no.	Net RRP	Gross RRP
15/17/18	**Pipe unit, PN 10**, assembled completely, consisting of: Console with brackets for wall mounting, Diaphragm pressure vessel 18 l, PN 10, Pressure gauge and pressure switch, up to 8 bar.			
	Pipe dimension **1¼"**	510.0011.001	**521.01 €**	620.00 €
	Pipe dimension **1½"**	510.0011.002	**526.89 €**	627.00 €
	Pipe dimension **2"**	510.0011.003	**543.70 €**	647.00 €
	Pipe unit, PN 16, assembled completely, consisting of: Console with brackets for wall mounting, Diaphragm pressure vessel 8 l, PN 16, Pressure gauge and pressure switch, up to 16 bar.			
	Pipe dimension **1¼"**	510.0012.001	**521.01 €**	620.00 €
	Pipe dimension **1½"**	510.0012.002	**526.89 €**	627.00 €
	Pipe dimension **2"**	510.0012.003	**543.70 €**	647.00 €
	Pipe unit, PN 10, assembled completely, consisting of: Console with brackets for wall mounting, Diaphragm pressure vessel 18 l, PN 10, Pressure gauge and pressure switch incl. 3 m cable for SPR-I/E/H			
	Pipe dimension **1 ¼"**	510.0011.004	**521.01 €**	620.00 €
	Pipe dimension **1 ½"**	510.0011.005	**526.89 €**	627.00 €
	Pipe dimension **2"**	510.0011.006	**543.70 €**	647.00 €
	Pipe unit, PN 16, assembled completely, consisting of: Console with brackets for wall mounting, Diaphragm pressure vessel 18 l, PN 10, Pressure gauge and pressure switch incl. 3 m cable for SPR-I/E/H			
	Pipe dimension **1 ¼"**	510.0012.004	**521.01 €**	620.00 €
	Pipe dimension **1 ½"**	510.0012.005	**526.89 €**	627.00 €
	Pipe dimension **2"**	510.0012.006	**543.70 €**	647.00 €

Pumpmeister PM

Piston pumps

Field of application
– Water supply
– Agriculture
– Rainwater utilisation
– Industry
– Shipping

Design
Pumpmeister:
Piston pump completely assembled with electrically isolated motor drawn rocker, electric motor, V-belt , V-belt pulley and guard, membrane safety valve (type tested), poppet valve and base plate.

Domestic waterwork with horizontal pressure vessel:
Pumpmeister piston pump with built-in membrane safety valve (type tested), electric motor, galvanised pressure vessel, pre-programmed pressure switch, pressure gauge, ventilation machine and completely closed belt guard made from plastic for your safety.

Motor
Protection class ..... IP 55
Class of insulation ..... F
Voltage ..... 3~ 400/230 V 10 %
Motor speed ..... 1450 rpm
Frequency ..... 50 Hz

Technical data
Flow rate ..... Q max. 3 m³/h
Total dynamic head ..... H max. 60 m
Vessel operating pressure, normal/max. ..... 4/6 bar

Pumped fluid
Pure, cold water as well as fluids which don't chemically and mechanically attack the pump materials.

Materials used
Housing ..... GG 20
Crank shaft ..... steel, drop-forged
Crosshead ..... precision ground
Piston rod ..... stainless steel, rolled
Cylinder liner ..... brass/stainless steel
Dual piston ..... Simrit
Valve ..... brass

Type key
PM 10/100
PM ..... pump type
10 ..... pump size
100 ..... vessel volume

Special editions
– Saline water
– Higher performances

Pumpmeister PM

Technical data

Type	Inlet connection (Rp)	Outlet connection (Rp)	Flow rate (m^3/h)	Operating pressure normal/max. (bar)	Cut-out pressure normal/max. (bar)	Power output P_2 (kW) 4 bar/6 bar	Weight with/without motor, 4 bar (kg)
Pumpmeister PM 10	1	1	1.00	4/6	3.5/5.5	0.25/0.37	23.00/28.00
Pumpmeister PM 15	1	1	1.50	4/6	3.5/5.5	0.37/0.55	24.00/31.00
Pumpmeister PM 20	1 ¼	1	2.00	4/6	3.5/5.5	0.37/0.55	33.00/40.00
Pumpmeister PM 30	1 ¼	1 ¼	3.00	4/6	3.5/5.5	0.55/0.75	55.00/64.00

Type	Vessel volume (l)	Flow rate (m^3/h)	Power output P_2 (kW) 3~ 400V 4 bar/6 bar	Space requirement L x B x H (cm)	Weight (kg)
Domestic waterwork PM 10	100	1.00	0.25/0.37	88 x 40 x (79)*	60.00
Domestic waterwork PM 10	150	1.00	0.25/0.37	105 x 45 x (84)*	70.00
Domestic waterwork PM 15	150	1.50	0.37/0.55	105 x 45 x (89)*	71.00
Domestic waterwork PM 15	200	1.50	0.37/0.55	107 x 50 x (94)*	83.00
Domestic waterwork PM 20	200	2.00	0.37/0.55	107 x 50 x (95)*	92.00
Domestic waterwork PM 20	300	2.00	0.37/0.55	140 x 55 x (98)*	97.00
Domestic waterwork PM 30	300	3.00	0.55/0.75	140 x 55 x (120)*	120.00

* 6 bar design on request.

Motor data

P_2 [kW]	0.25	0.37	0.55	0.75
I_N [A]..... 3~ 230/400V	1.40/0.80	1.85/1.05	2.40/1.39	3.05/1.75

Order information

Type	Article no.	Net RRP	Gross RRP
Pumpmeister PM 10, 3~, 4 bar, 0.25 kW	410.1000.007	**1.113,45 €**	1.325,00 €
Pumpmeister PM 10, 3~, 6 bar, 0.37 kW	410.1000.607	**1.131,93 €**	1.347,00 €
Pumpmeister PM 15, 3~, 4 bar, 0.37 kW	410.1500.007	**1.217,65 €**	1.449,00 €
Pumpmeister PM 15, 3~, 6 bar, 0.55 kW	410.1500.607	**1.275,63 €**	1.518,00 €
Pumpmeister PM 20, 3~, 4 bar, 0.37 kW	410.2000.007	**1.349,58 €**	1.606,00 €
Pumpmeister PM 20, 3~, 6 bar, 0.55 kW	410.2000.607	**1.405,04 €**	1.672,00 €
Pumpmeister PM 30, 3~, 4 bar, 0.55 kW	410.3000.007	**1.778,99 €**	2.117,00 €
Pumpmeister PM 30, 3~, 6 bar, 0.75 kW	410.3000.607	**1.805,88 €**	2.149,00 €
Domestic waterwork PM 10 (100 l), 3~, 4 bar, 0.25 kW	410.1010.007	**1.877,31 €**	2.234,00 €
Domestic waterwork PM 10 (150 l), 3~, 4 bar, 0.25 kW	410.1015.007	**1.990,76 €**	2.369,00 €
Domestic waterwork PM 15 (150 l), 3~, 4 bar, 0.37 kW	410.1515.007	**2.084,87 €**	2.481,00 €
Domestic waterwork PM 15 (200 l), 3~, 4 bar, 0.37 kW	410.1520.007	**2.214,29 €**	2.635,00 €
Domestic waterwork PM 20 (200 l), 3~, 4 bar, 0.37 kW	410.2020.007	**2.331,09 €**	2.774,00 €
Domestic waterwork PM 20 (300 l), 3~, 4 bar, 0.37 kW	410.2030.007	**2.478,15 €**	2.949,00 €
Domestic waterwork PM 30 (300 l), 3~, 4 bar, 0.55 kW	410.3030.007	**2.885,71 €**	3.434,00 €
Domestic waterwork PM 10 (100 l), 3~, 6 bar, 0.37 kW	410.1010.617	**2.215,97 €**	2.637,00 €
Domestic waterwork PM 10 (150 l), 3~, 6 bar, 0.37 kW	410.1015.617	**2.319,33 €**	2.760,00 €
Domestic waterwork PM 15 (150 l), 3~, 6 bar, 0.55 kW	410.1515.617	**2.478,15 €**	2.949,00 €
Domestic waterwork PM 15 (200 l), 3~, 6 bar, 0.55 kW	410.1520.617	**2.650,42 €**	3.154,00 €
Domestic waterwork PM 20 (200 l), 3~, 6 bar, 0.55 kW	410.2020.617	**2.781,51 €**	3.310,00 €
Domestic waterwork PM 20 (300 l), 3~, 6 bar, 0.55 kW	410.2030.617	**2.940,34 €**	3.499,00 €
Domestic waterwork PM 30 (300 l), 3~, 6 bar, 0.75 kW	410.3030.617	**3.325,21 €**	3.957,00 €

Pumpmeister PM

Dimensions

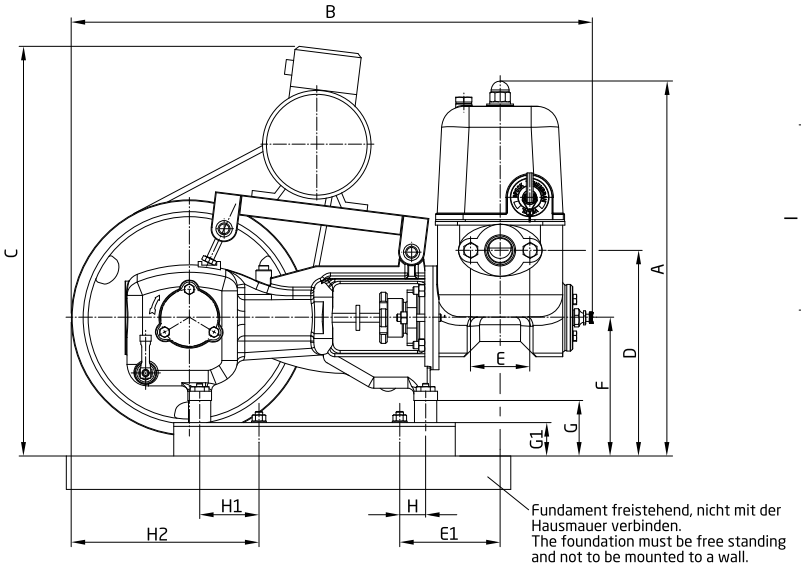

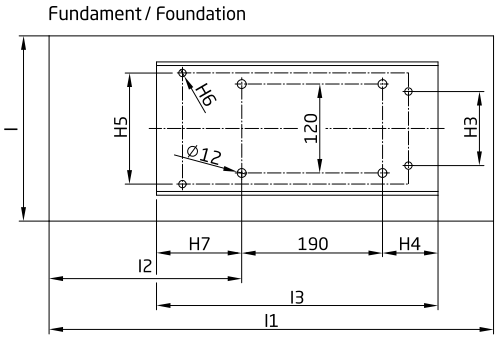

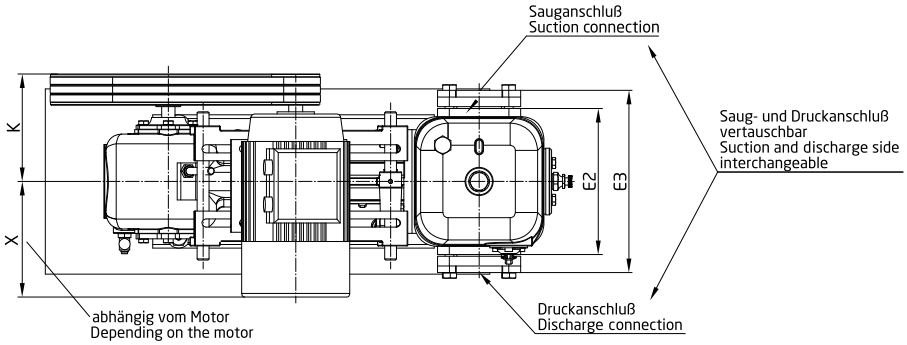

Pump

Type	A	B	C	D	E	E1	E2	E3	F	K	DNS	DND
PM 10	358	526	*	201	54	123.5	155	196	136	110	G1	G1
PM 15	383	525	*	194	70	122	155	200	136	110	G1	G1
PM 20	416	620	*	209	70	121	170	215	140	130	G1 ¼	G1
PM 30	510	690	*	275	80	135	195	240	185	145	G1 ¼	G1 ¼

***) C depends on the motor**
Dimensions for 6 bar design on request.

Foundations

Type	G	G1	H	H1	H2	H3	H4	H5	H6	H7	I	I1	I2	I3
PM 10	70	40	40	35	105	90	60	110	Ø7	60	250	450	130	310
PM 15	70	40	40	35	105	90	60	110	Ø7	60	250	450	130	310
PM 20	70	40	23	70	192.5	92.5	55	140	Ø7	115	270	520	220	360
PM 30	75	45	35	80	260	100	75	150	Ø12	115	320	600	290	380

Pumpmeister PM

Dimensions

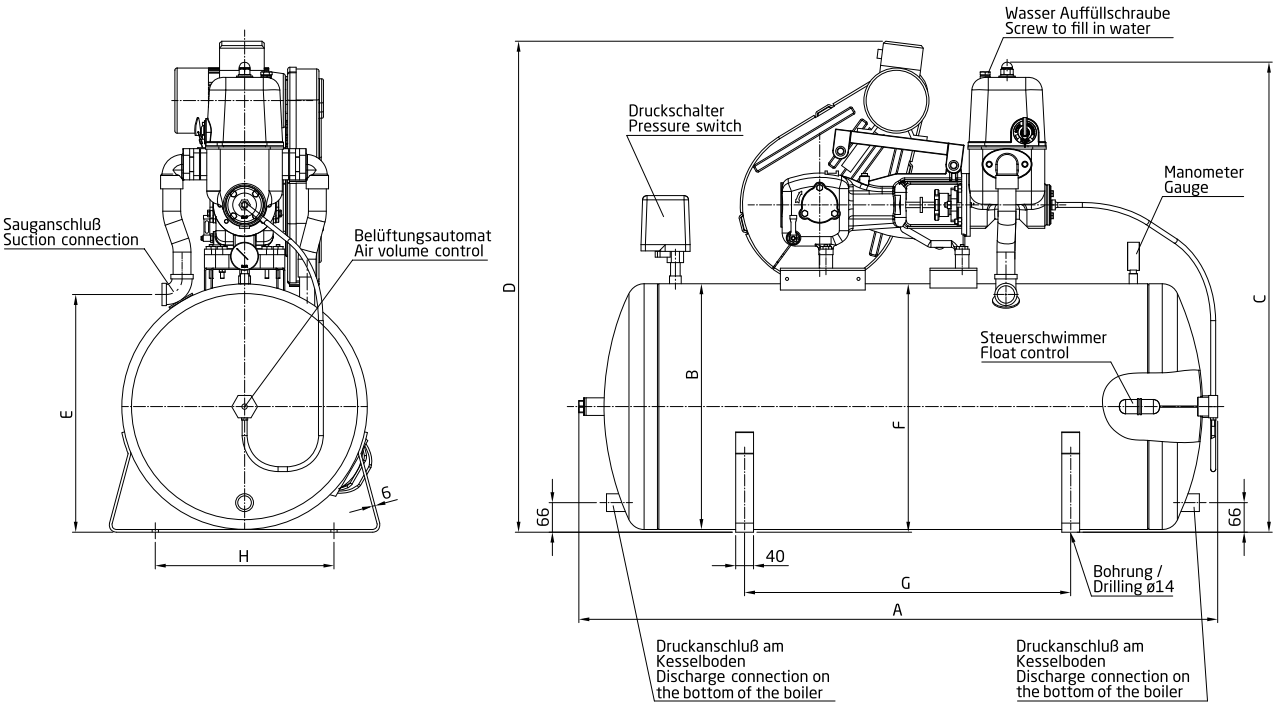

Domestic waterwork

Vessel volume			PM 10	PM 15	PM 20	PM 30							
Litre	**A**	**B**	**C**	**C**	**C**	**C**	**D**	**E**	**F**	**Gv**	**H**	**DNS**	**DND**
100	930	400	780	776	-	-	*	400	410	600	260	G1	G1
150	1110	450	830	826	860	-	*	440	460	600	300	G1	G1
200	1230	500	880	876	910	-	*	500	510	600	350	G1 ¼	G1
300	1430	550	-	926	960	1065	*	540	560	730	400	G1 ¼	G1

***) D depends on the motor**

Dimensions for 6 bar design on request.

Büffelpumpe BS

Piston pumps

Field of application
- Water supply
- Agriculture
- Rainwater utilisation
- Industry
- Shipping

Design
Pumpmeister:
Piston pump completely assembled with electrically isolated motor drawn rocker, electric motor, V-belt , V-belt pulley and guard, membrane safety valve (type tested) and poppet valve.

Domestic waterwork with horizontal pressure vessel:
Büffel piston pump with built-in membrane safety valve (type tested), electric motor, galvanised pressure vessel, pre-programmed pressure switch, pressure gauge, ventilation machine and completely closed belt guard made from plastic for your safety.

Motor
Protection class	IP 55
Class of insulation	F
Voltage	3~ 400/230 V ± 10 %
Motor speed	1450 rpm
Frequency	50 Hz

Technical data
Flow rate	Q max. 3 m³/h
Total dynamic head	H max. 60 m
Vessel operating pressure, normal/max.	4/6 bar

Pumped fluid
Pure, cold water as well as fluids which don't chemically and mechanically attack the pump materials.

Materials used
Housing	GG 20
Crank shaft	steel, drop-forged
Crosshead	precision ground
Piston rod	stainless steel, rolled
Cylinder liner	brass/stainless steel
Dual piston	Simrit
Valve	brass

Type key
BS 25/300

BS	pump type
25	pump size
300	vessel volume

Special editions
- Saline water
- Higher performances

Büffelpumpe BS

Technical data

Type	Inlet connection (Rp)	Outlet connection (Rp)	Flow rate (m^3/h)	Operating pressure normal/max. (bar)	Cut-out pressure normal/max. (bar)	Power output P_2 (kW) 4 bar/6 bar	Weight with/without motor, 4 bar (kg)
Büffelpumpe BS 15	1	1	1.50	4/6	3.5/5.5	0.37/0.55	28.00/35.00
Büffelpumpe BS 25	1 ¼	1	2.50	4/6	3.5/5.5	0.55/0.75	46.00/55.00
Büffelpumpe BS 40	1 ½	1 ¼	4.00	4/6	3.5/5.5	0.75/1.10	66.00/80.00
Büffelpumpe BS 50	2	1 ½	5.00	4/6	3.5/5.5	1.10/1.50	90.00/106.00

Type	Vessel volume (l)	Flow rate (m^3/h)	Power output P_2 (kW) 3~ 400V 4 bar/6 bar	Space requirement L x B x H (cm)	Weight (kg)
Domestic waterwork BS 15	150	1.50	0.37/0.55	105 x 45 x (84)*	75.00
Domestic waterwork BS 15	200	1.50	0.37/0.55	107 x 50 x (85)*	87.00
Domestic waterwork BS 25	200	2.50	0.55/0.75	107 x 50 x (100)*	105.00
Domestic waterwork BS 25	300	2.50	0.55/0.75	140 x 55 x (110)*	110.00

* 6 bar design on request.

Motor data

P_2 [kW]	0.37	0.55	0.75	1.10	1.50
I_N [A]..... 3~ 230/400V	1.85/1.05	2.40/1.39	3.05/1.75	4.25/2.40	5.60/3.15

Order information

Type	Article no.	Net RRP	Gross RRP
Büffelpumpe BS 15, 3~, 4 bar, 0.37 kW	420.1500.007	1.685,71 €	2.006,00 €
Büffelpumpe BS 15, 3~, 6 bar, 0.55 kW	420.1500.607	1.740,34 €	2.071,00 €
Büffelpumpe BS 25, 3~, 4 bar, 0.55 kW	420.2500.007	2.107,56 €	2.508,00 €
Büffelpumpe BS 25, 3~, 6 bar, 0.75 kW	420.2500.607	2.136,13 €	2.542,00 €
Büffelpumpe BS 40, 3~, 4 bar, 0.75 kW	420.4000.007	2.741,18 €	3.262,00 €
Büffelpumpe BS 40, 3~, 6 bar, 1.10 kW	420.4000.607	2.839,50 €	3.379,00 €
Büffelpumpe BS 50, 3~, 4 bar, 1.10 kW	420.5000.007	3.845,38 €	4.576,00 €
Büffelpumpe BS 50, 3~, 6 bar, 1.50 kW	420.5000.607	3.930,25 €	4.677,00 €
Domestic waterwork BS 15 (150 l), 3~, 4 bar	420.1515.007	2.542,86 €	3.026,00 €
Domestic waterwork BS 15 (200 l), 3~, 4 bar	420.1520.007	2.673,11 €	3.181,00 €
Domestic waterwork BS 25 (200 l), 3~, 4 bar	420.2520.007	3.057,14 €	3.638,00 €
Domestic waterwork BS 25 (300 l), 3~, 4 bar	420.2530.007	3.142,02 €	3.739,00 €
Domestic waterwork BS 15 (150 l), 3~, 6 bar	420.1515.617	2.943,70 €	3.503,00 €
Domestic waterwork BS 15 (200 l), 3~, 6 bar	420.1520.617	3.116,81 €	3.709,00 €
Domestic waterwork BS 25 (200 l), 3~, 6 bar	420.2520.617	3.480,67 €	4.142,00 €
Domestic waterwork BS 25 (300 l), 3~, 6 bar	420.2530.617	3.587,39 €	4.269,00 €

Büffelpumpe BS

Dimensions

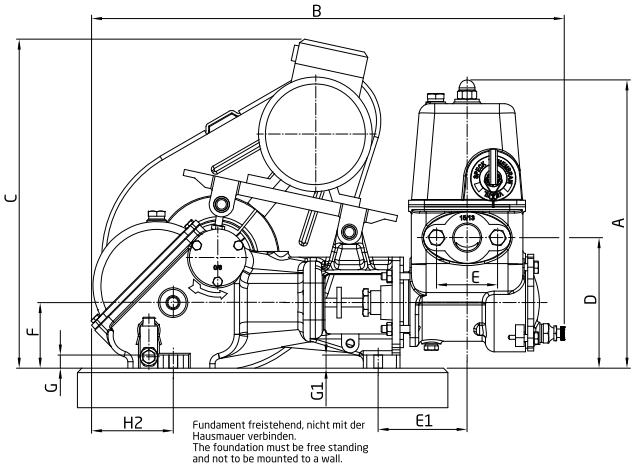

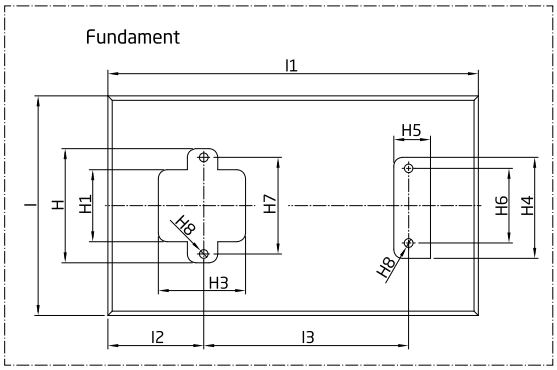

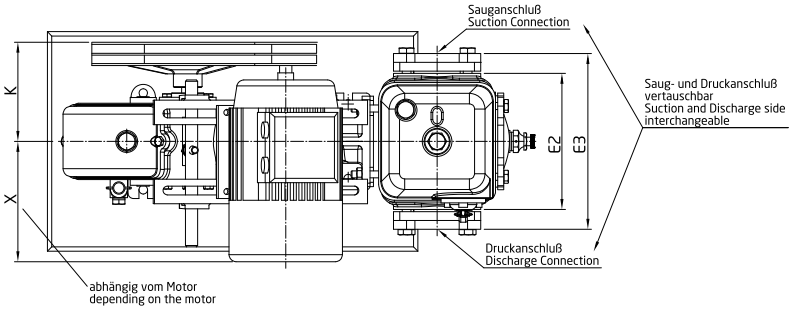

Pump

Type	A	B	C	D	E	E1	E2	E3	F	K	DNS	DND
BS 15	329	545	*	149	70	105	155	200	75	113	G1	G1
BS 25	377	667	*	192	70	119	170	215	94	121	G1¼	G1
BS 40	417	771	*	208	80	148	190	239	104	135	G1½	G1¼
BS 50	460	860	*	246	85	171.5	226	281	123	160	G2	G1½

***) C depends on the motor**
Dimensions for 6 bar design on request.

Foundations

Type	G	G1	H	H1	H2	H3	H4	H5	H6	H7	H8	I	I1	I2	I3
BS 15	15	15	130	82	95	100	110	42	85	110	10	250	425	110	235
BS 25	16	16	148	94	121	130	135	48	108	120	12	300	550	170	307
BS 40	20	16	175	114	149	160	117	70	90	140	14	300	600	180	335
BS 50	19	19	200	100	163	190	130	90	95	165	14	350	650	180	380

Büffelpumpe BS

Dimensions

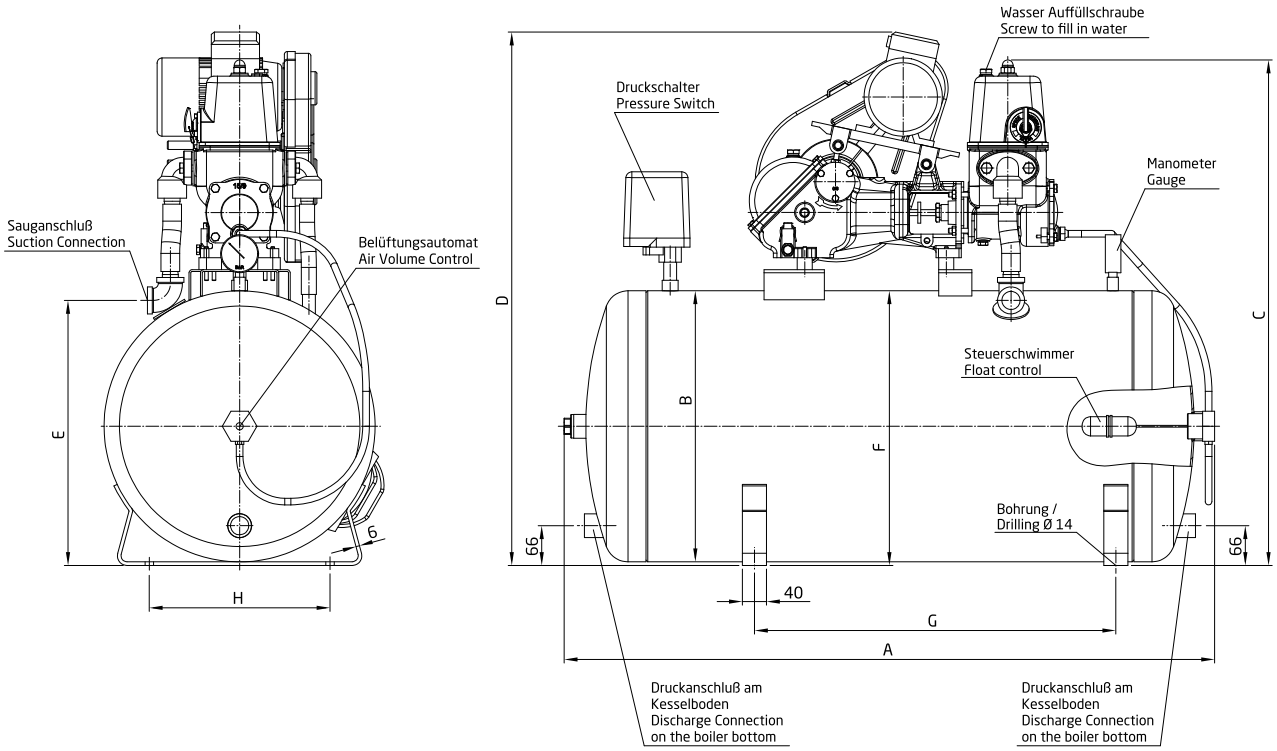

Domestic waterwork

Vessel volume			BS 15	BS 25	BS 40							
Litre	**A**	**B**	**C**	**C**	**C**	**D**	**E**	**F**	**G**	**H**	**DNS**	**DND**
150	1110	450	842			*	440	460	600	300	G1	G1
200	1230	500	892	949		*	500	510	600	350	G1¼	G1
300	1430	550	942	998	1041	*	540	560	730	400	G1¼	G1

***) D depends on the motor**

Dimensions for 6 bar design on request.

SKG

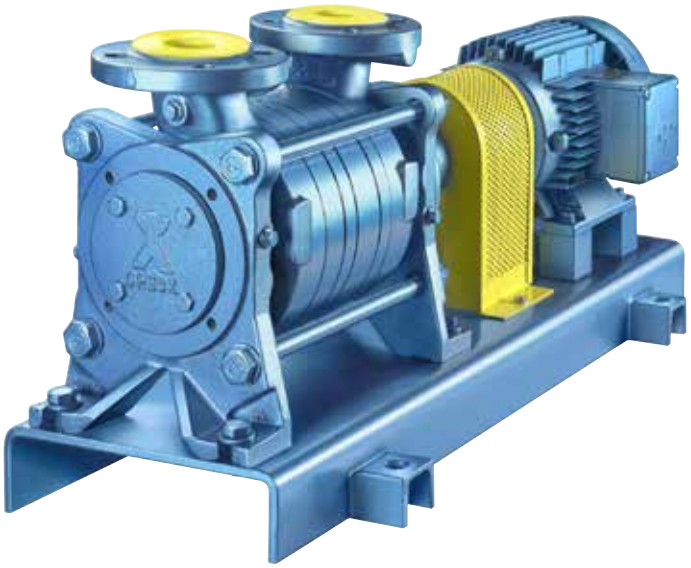

Side channel pumps

Field of application
– Water supply
– Equipment engineering
– Irrigation
– Agriculture
– Shipping

Design
Self-priming side channel pumps, suitable for pure, water-like fluids. Completely mounted on a base plate, including pump, motor, coupling and coupling protection.

Motor
Protection class ..... IP 55
Class of insulation ..... F
Voltage ..... 3~ 400 V ± 10 %
Motor speed ..... 1450 rpm
Frequency ..... 50 Hz

Technical data
Flow rate ..... Q up to max. 7.5 m³/h
Total dynamic head ..... H up to max. 100 mWs
Fluid temperature ..... t up to max. 120 °C
Operating pressure ..... p up to max. PN 40

Pumped fluid
Fresh water, hot water, saltwater and pumped fluid without abrasive impurities and solid content. Fluids which don't chemically and mechanically attack the pump materials.

Materials used
Housing ..... spheroidal cast iron*)
Impeller ..... GBZ*)
Mechanical seal ..... activated carbon/SiC/Viton*)
Round flange ..... EN 1092-2, PN 40*)

*) Other designs and drinking water supply on request

Type key
SKG 3202-L-013-11
SKG ..... pump type
32 ..... pump size
02 ..... number of stages
L ..... shaft bearing (number)
013 ..... mechanical seal code
11 ..... material design

Order information

Type	Article no.	Net RRP	Gross RRP
SKG 2002-L	317.2020.052	**2,026.89 €**	2,412.00 €
SKG 2003-L	317.2030.052	**2,221.01 €**	2,643.00 €
SKG 3201-L	317.3210.052	**2,158.82 €**	2,569.00 €
SKG 3202-L	317.3220.052	**2,372.27 €**	2,823.00 €
SKG 3301-L	317.3310.052	**2,182.35 €**	2,597.00 €
SKG 3302-L	317.3320.052	**2,449.58 €**	2,915.00 €
Set of counter flanges SKG 20	312.0000.090	**76.97 €**	91.60 €
Set of counter flanges SKG 32/33	313.0000.090	**82.94 €**	98.70 €

All pumps are delivered with motor, base plate, coupling and coupling protection, but without counter flanges.

SKG

Characteristics

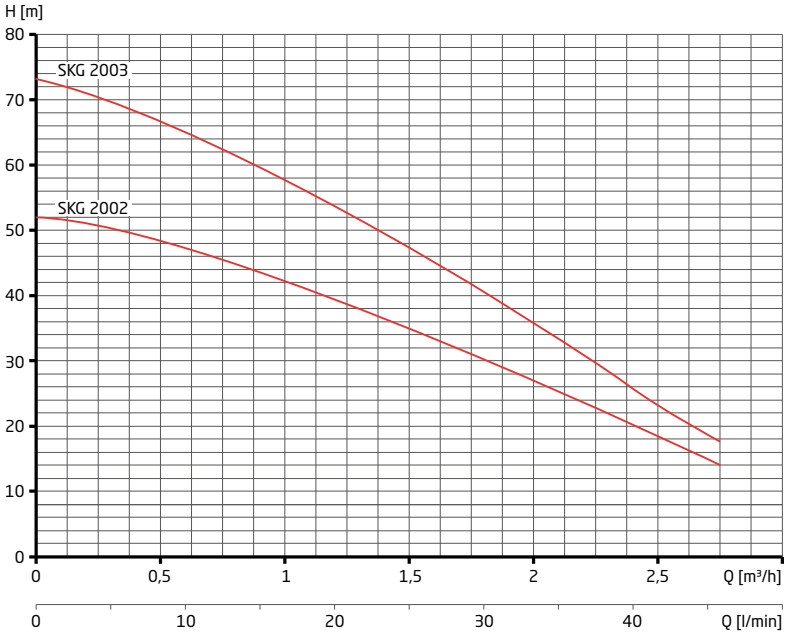

Technical data

Type	Max. flow rate Q (m³/h)	Motor performance P_2 (kW) 3~ 400 V	Rated current (A) 3~ 400 V	Construction size	DNS	DND	Approx. weight (kg)
SKG 2002-L	2.60	0.75	1.70	80	20	20	53.00
SKG 2003-L	2.60	1.10	2.50	90S	20	20	71.00

Dimensions

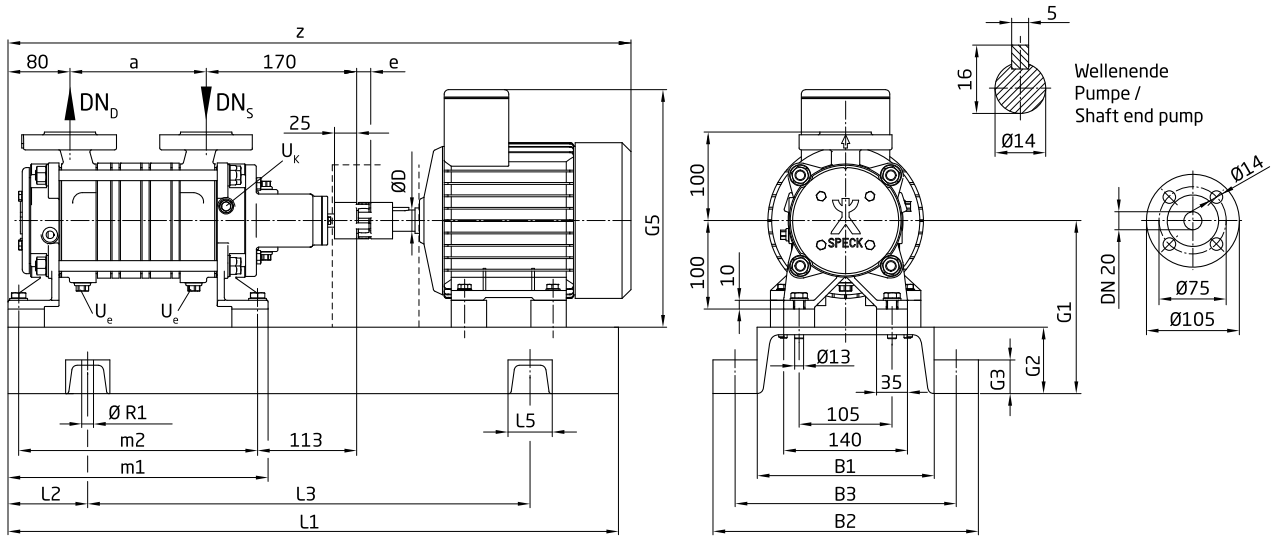

Type	a	e	m1	m2	z*)	B1	B2	B3	ØD	G1	G2	G3	G5*)	L1	L2	L3	L5	ØR1
SKG 2002-L	120	16	270	236	678	180	280	230	19	170	70	38	221	650	100	450	50	18.5
SKG 2003-L	154	16	304	270	767	200	300	250	24	175	75	38	226	700	100	500	50	18.5

*) depending on the motor

SKG

Characteristics

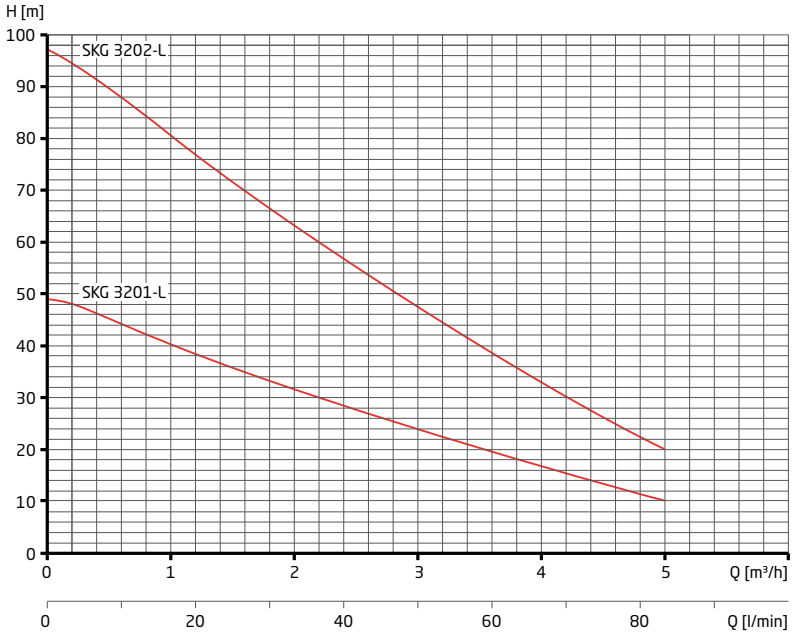

Technical data

Type	Max. flow rate Q (m³/h)	Motor performance (kW) 3~ 400 V	Rated current (A) 3~ 400 V	Construction size	DNS	DND	Approx. weight (kg)
SKG 3201-L	5.0	0.75	1.7	80	32	32	71.00
SKG 3202-L	5.0	1.50	3.4	90L	32	32	85.00

Dimensions

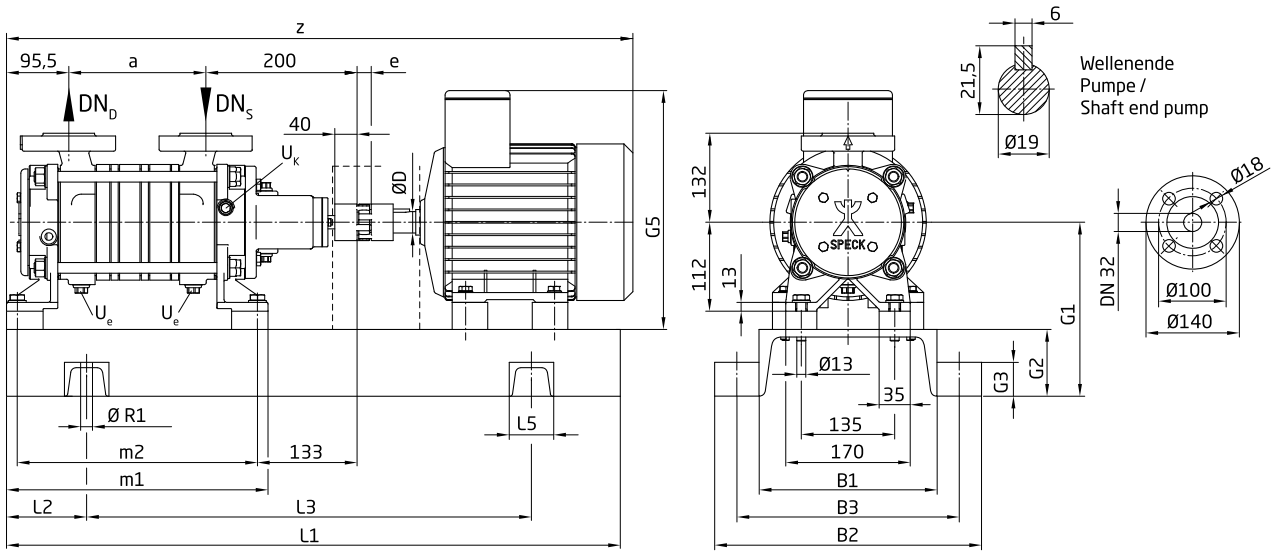

Type	a	e	m1	m2	z*)	B1	B2	B3	ØD	G1	G2	G3	G5*)	L1	L2	L3	L5	ØR1
SKG 3201-L	146	16	327	286	734	200	300	250	19	187	75	38	251	750	100	550	50	18.5
SKG 3202-L	146	18	327	286	847	200	300	250	24	187	75	38	238	750	100	550	50	18.5

*) depending on the motor

SKG

Characteristics

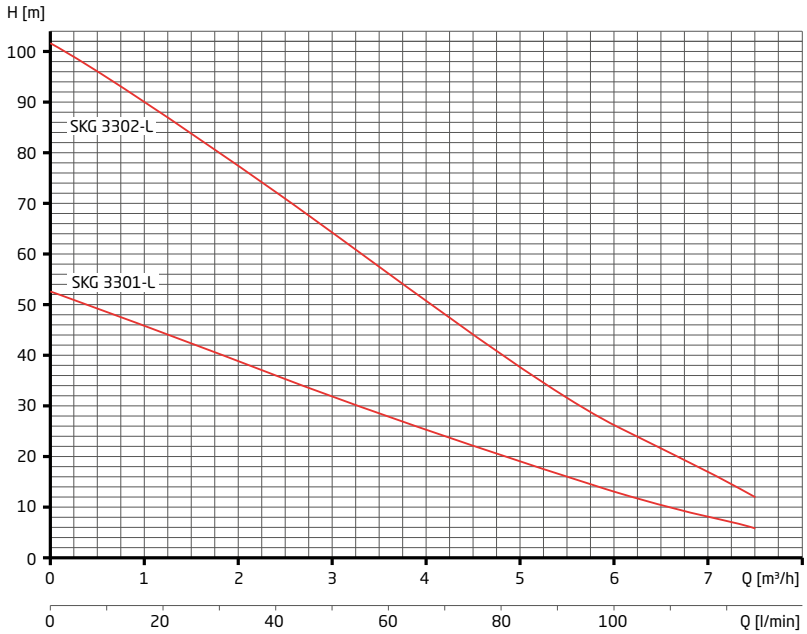

Technical data

Type	Max. flow rate Q (m³/h)	Motor performance (kW) 3~ 400 V	Rated current (A) 3~ 400 V	Construction size	DNS	DND	Approx. weight (kg)
SKG 3301-L	7.50	1.10	2.50	90S	32	32	82.00
SKG 3302-L	7.50	2.20	4.50	100L	32	32	104.00

Dimensionsv

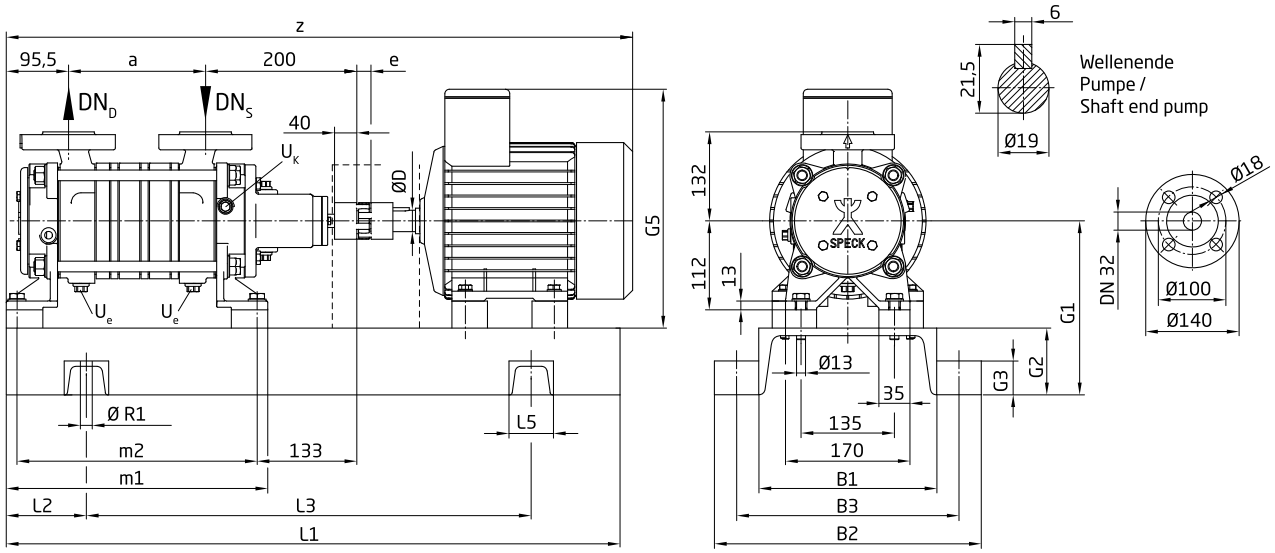

Type	a	e	m1	m2	z*)	B1	B2	B3	ØD	G1	G2	G3	G5*)	L1	L2	L3	L5	ØR1
SKG 3301-L	146	18	327	286	807	200	300	250	24	187	75	38	238	750	100	550	50	18.5
SKG 3302-L	146	18	327	286	848	220	320	270	28	192	80	38	305	800	100	600	50	18.5

*) depending on the motor

Rainwater utilisation

Product overview

SG/SGM (DA)/Speckmat
Performance: up to 4 m³/h
Page 162

ZIS
Performance: up to max. 4.8 m³/h
Page 166

Zismatic
Performance: up to max. 4 m³/h
Page 168

SG/SGM

Centrifugal pumps

Field of application
- Rainwater utilisation
- Washing systems
- Equipment engineering
- Shipping

Design
SG/SGM:
Self-priming centrifugal pumps suitable for pure, water-like fluids. Equipped with motor bearings which are lubricated for life. Shaft seal in the form of a mechanical seal. Single phase design with on/off switch in terminal box, 1.5 m cable and shockproof plug.
SGM-Speckmat:
Including Speckmat 1 switching device for automatic, pressure dependent activation as well as flow dependent deactivation. Integrated dry run protection.
SG/SGM-DA:
Including 20 l stainless steel diaphragm pressure vessel and pressure gauge as well as a pressure switch for automatic activation and deactivation.

Motor
Protection class	IP 54
Class of insulation	F
Voltage	1~ 230 V ± 10 %
	built-in overload protection
Voltage	3~ 400/230 V ± 10 %
Motor speed	2850 rpm
Frequency	50 Hz

Technical data
Flow rate	Q up to max. 4 m³/h
Total dynamic head	H up to max. 50 mWs
Fluid temperature	t up to max. 45 °C
Operating pressure	p up to max. 6 bar

Pumped fluid
Pure, cold water as well as fluids which don't chemically and mechanically attack the pump materials.

Materials used
Pump housing	stainless steel AISI 304
Impellers	stainless steel AISI 304
Shaft	stainless steel AISI 303
Housing lid	stainless steel AISI 304
Pump feet	stainless steel AISI 304
Motor housing	stainless steel AISI 304
Sealing rings	NBR
Diffuser	Noryl
Mechanical seal	carbon/ceramic
Filling and drain plugs	stainless steel AISI 304

Type key
SG(M) 100

SG	pump type
M	single phase 1~ 230V
100	pump size

Speckmat	switching device
DA	small booster unit
101/201	pump type

Special editions
- Special voltages
- Special mechanical seals

SG/SGM

Characteristics

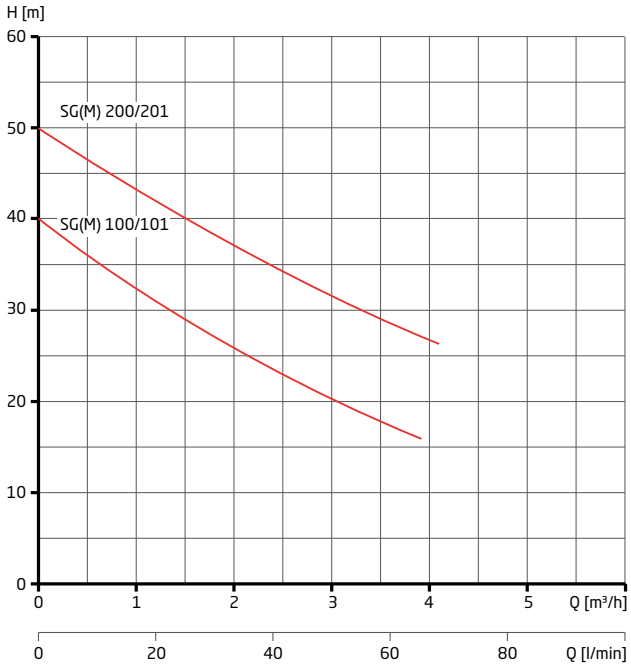

Technical data

Type	Inlet connection	Outlet connection	Power output P_2 (kW)	Rated current (A) 3~ 400 V	Rated current (A) 1~ 230 V	Weight (kg)
SG/SGM 100	Rp 1 ¼	Rp 1	0.60	1.90	4.70	10.50
SG/SGM 200	Rp 1 ¼	Rp 1	0.88	2.10	6.70	12.50
SGM-Speckmat 101	Rp 1 ¼	R 1	0.60	-	4.70	12.50
SGM-Speckmat 201	Rp 1 ¼	R 1	0.88	-	6.70	14.50
SG-DA/SGM-DA 101	Rp 1 ¼	Rp 1	0.60	1.90	4.70	16.50
SG-DA/SGM-DA 201	Rp 1 ¼	Rp 1	0.88	2.10	6.70	19.50

Type	Starting pressure (bar)	Max. operating pressure (bar)	Max. fluid temperature (°C)	Voltage (V)	Max. rated current (A)	Protection class (IP)	Weight (kg)
Speckmat switching device	2.20	10	60	1~ 230 V	8.00	65	1.60

Order information

Type	Article no.	Net RRP	Gross RRP
SG 100	640.0100.037	351.26 €	418.00 €
SGM 100	640.0100.038	335.29 €	399.00 €
SG 200	640.0200.037	520.17 €	619.00 €
SGM 200	640.0200.038	507.56 €	604.00 €
SGM-Speckmat 101	569.8330.000	465.55 €	554.00 €
SGM-Speckmat 201	569.8530.000	636.13 €	757.00 €
SG-DA 101	569.8410.000	651.26 €	775.00 €
SGM-DA 101	569.8310.000	608.40 €	724.00 €
SG-DA 201	569.8610.000	822.69 €	979.00 €
SGM-DA 201	569.8510.000	784.87 €	934.00 €
Speckmat switching device	569.8003.450	129.41 €	154.00 €
Foot valve 1 1/4"	507.2200.032	97.48 €	116.00 €
Non-return valve 1 1/4"	507.2300.032	64.71 €	77.00 €

SG/SGM

Dimensions

SG/SGM

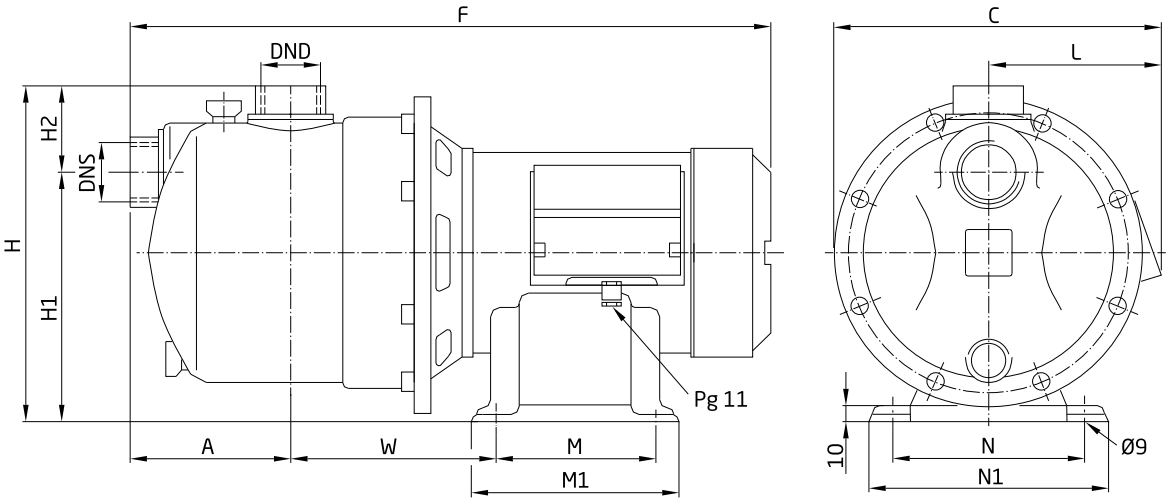

Type	A	C	F	H	H1	H2	L	M	M1	N	N1	W	DNS	DND
SG(M) 100	100.5	211	396	210	156	54	107	100	131	120	150	128	Rp1 ¼	Rp1
SG(M) 200	100.5	211	426	210	156	54	107	100	131	120	150	143	Rp1 ¼	Rp1

SGM-Speckmat

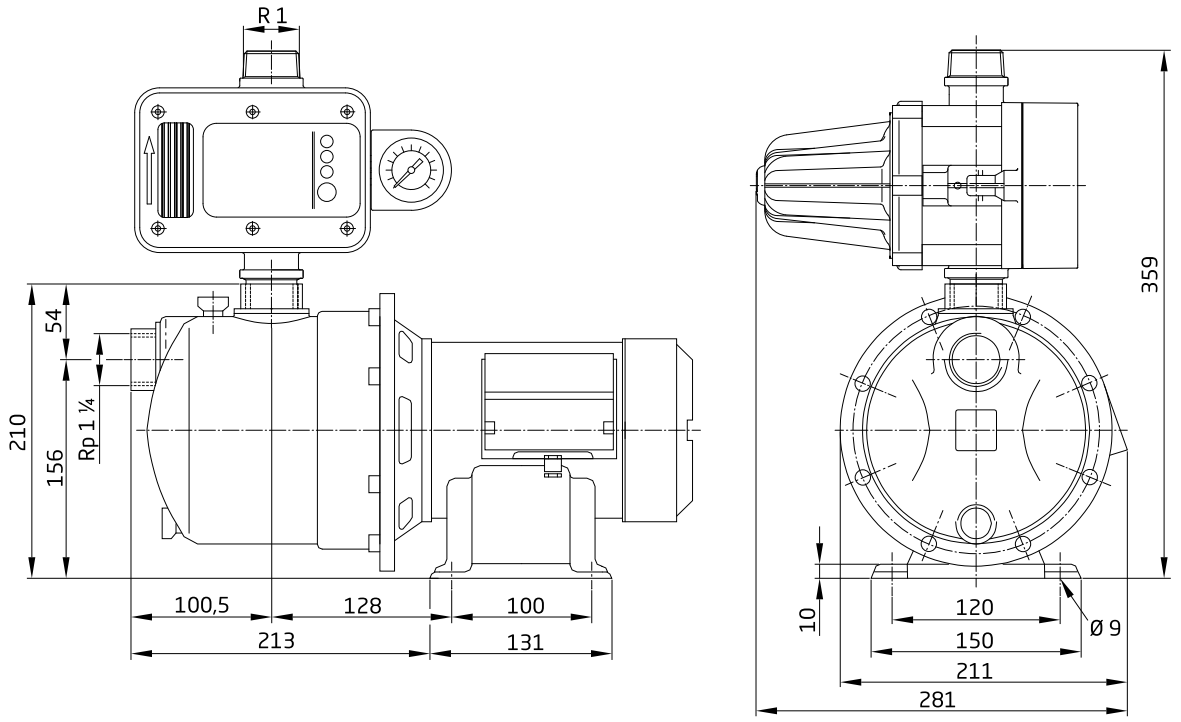

SG/SGM

Dimensions

SG-DA/SGM-DA

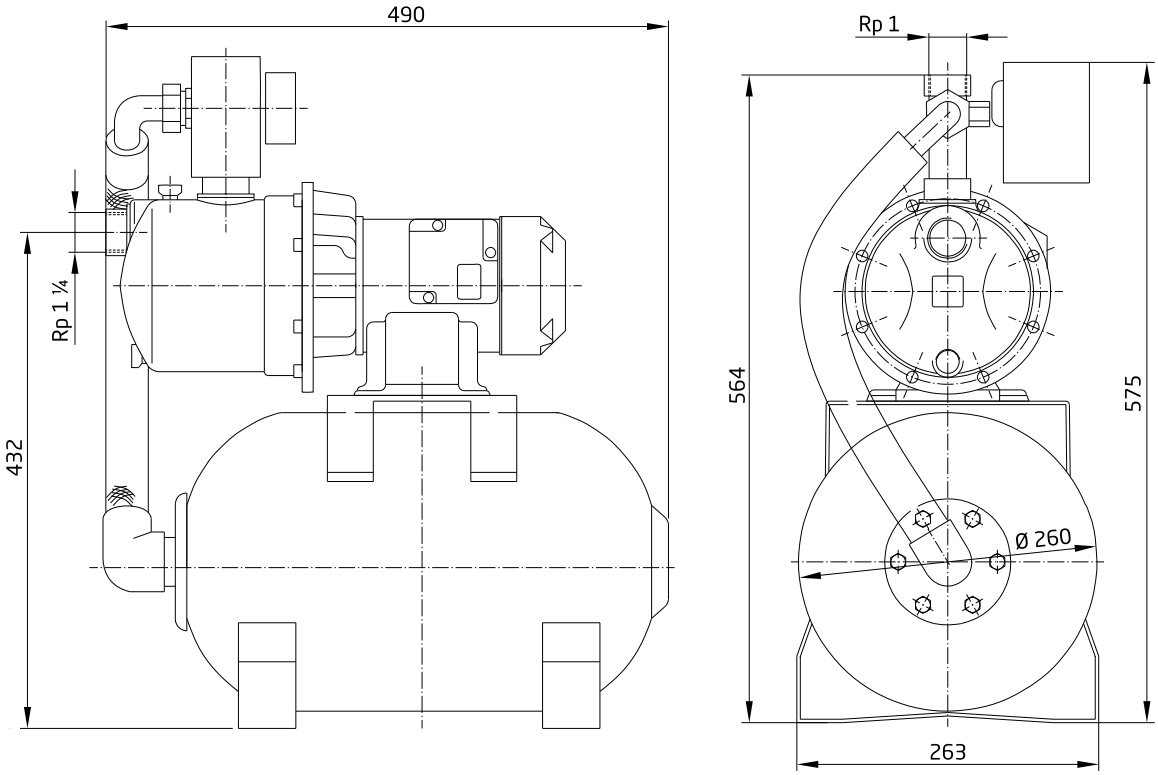

ZIS

Borehole pumps

Field of application
– Irrigation
– Rainwater utilisation

Design
Multistage borehole pump (cistern pump) made from corrosion-resistant stainless steel/plastic. Motor with built-in thermal overload protection. Wired ready for connection with 20 m cable and shock proof plug.

Motor
Protection class	IP 68
Class of insulation	F
Voltage	1~ 230 V ± 10 %
Motor speed	2800 rpm
Frequency	50 Hz

Technical data
Flow rate	Q up to max. 4.8 m³/h
Total dynamic head	H up to max. 85 m
Fluid temperature	t 5 °C to 35 °C
Impeller grain size	2.5 mm

Pumped fluid
Clear fluids which don't chemically and mechanically attack the pump materials.

Materials used
Pump housing	stainless steel AISI 304
Stages/impellers	PPE + PS glass fibre reinforced
Shaft	stainless steel AISI 431
Shaft seal	2 seals in oil tank
O-rings	NBR
Cable	H07RN-F

Type key
ZIS 40/10 WES

ZIS	pump range
40	pump size
10	number of stages
WES	single phase with float switch

ZIS

Characteristics

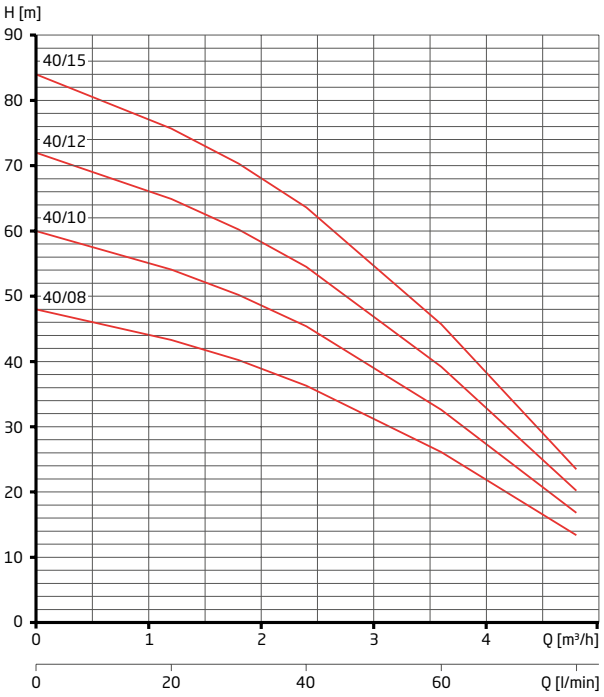

Dimensions

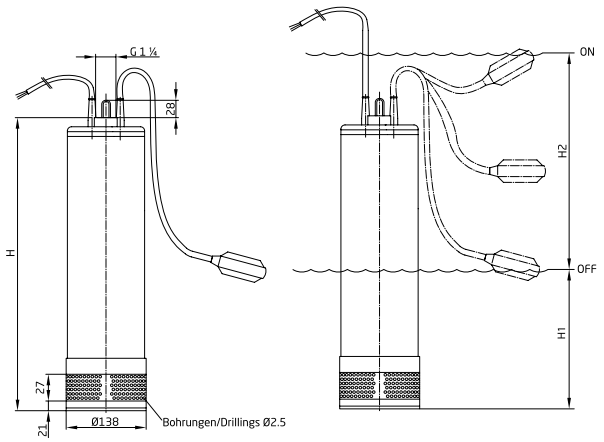

Type	H	H1	H2
ZIS 40/08	513	180	560
ZIS 40/10	539	190	590
ZIS 40/12	590	220	660
ZIS 40/15	616	240	730

Technical data

Type	Outlet connection (Rp)	Cable length (m)	Power output P_2 (kW)	Rated current (A) 1~ 230 V	Weight (kg)
ZIS 40/08 WES	1 ¼	20	0.60	4.30	15.00
ZIS 40/10 WES	1 ¼	20	0.75	5.70	16.00
ZIS 40/12 WES	1 ¼	20	0.90	6.80	17.00
ZIS 40/15 WES	1 ¼	20	1.10	7.30	18.00

Type	Starting pressure (bar)	Max. operating pressure (bar)	Max. fluid temperature (°C)	Voltage (V)	Max. rated current (A)	Protection class (IP)	Weight (kg)
Speckmat switching device	2.20	10	60	1~ 230 V	8.00	65	1.60

Order information

Type	Article no.	Net RRP	Gross RRP
ZIS 40/08 WES	640.4008.018	651.26 €	775.00 €
ZIS 40/10 WES	640.4010.018	697.48 €	830.00 €
ZIS 40/12 WES	640.4012.018	727.73 €	866.00 €
ZIS 40/15 WES	640.4015.018	762.18 €	907.00 €

Accessories

Type	Article no.	Connection	Net RRP	Gross RRP
Speckmat switching device	569.8003.450		129.41 €	154.00 €
Diaphragm vessel DD 18, 18 litre, max. 10 bar	505.4100.018	R ¾	93.28 €	111.00 €
Diaphragm vessel 18 litre, max. 10 bar, stainless steel	505.5100.019	R ¾	226.05 €	269.00 €

Zismatic

Borehole pump

Field of application
– Irrigation
– Rainwater utilisation

Design
Multistage borehole pump (cistern pump) made from corrosion-resistant stainless steel/plastic, including non-return valve, pressure switch and dry run protection. Motor with built-in thermal overload protection. Wired ready for connection with 15 m cable and shock proof plug. Pump including diaphragm pressure vessel with 0.1 l rated volume.

Motor
Protection class ..... IP 68
Class of insulation ..... F
Voltage ..... 1~ 230 V ± 10 %
Motor speed ..... 2800 rpm
Frequency ..... 50 Hz

Technical data
Flow rate ..... Q up to max. 4 m³/h
Total dynamic head ..... H up to max. 63 m
Fluid temperature ..... t 5 °C to 35 °C
Impeller grain size ..... 2 mm

Pumped fluid
Clear fluids which don't chemically and mechanically attack the pump materials.

Materials used
Pump housing ..... stainless steel AISI 304
Stages ..... technopolymer
Impellers ..... stainless steel AISI 304
Pump shaft ..... stainless steel AISI 431
Shaft seal ..... mechanical seal
O-rings ..... NBR
Cable H07RN-F

Type key
Zismatic 40/10 WE
Zismatic ..... pump range
40 ..... pump size
10 ..... number of stages
WE ..... single phase

Zismatic

Characteristics

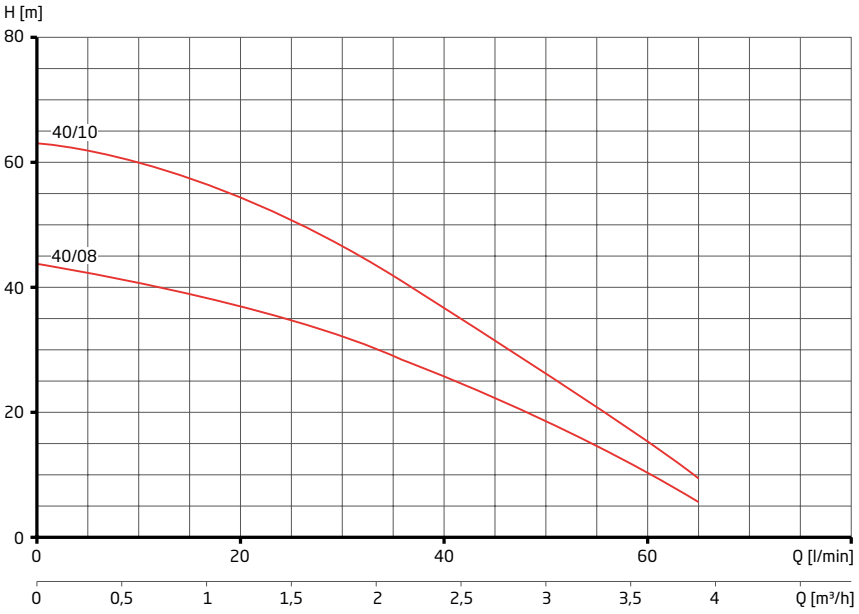

Dimensions

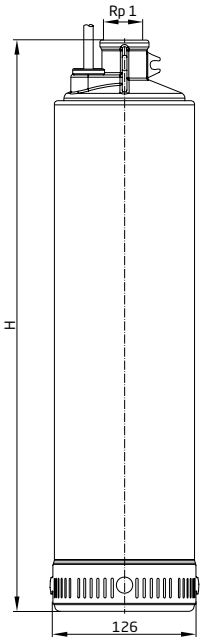

Typ	H
Zismatic 40/08	493
Zismatic 40/10	560

Technical data

Type	Outlet connection (Rp)	Cable length (m)	Starting pressure (bar)	Power output P_2 (kW)	Rated current (A) 1~ 230 V	Weight (kg)
Zismatic 40/08 WE	1	15	2.00	0.55	3.60	10.60
Zismatic 40/10 WE	1	15	3.00	0.90	6.20	12.40
Floating discharge						2.20

Order information

Type	Article no.	Net RRP	Gross RRP
Zismatic 40/08 WE (inc. 0.1 litre diaphragm pressure vessel)	601.0400.828	**669.75 €**	797.00 €
Zismatic 40/10 WE (inc. 0.1 litre diaphragm pressure vessel)	601.0401.028	**733.61 €**	873.00 €
Floating discharge	601.0000.010	**151.26 €**	180.00 €

WATER DISPOSAL

Drainage 172

Drainage

Product overview

TOP 57-59
Performance: up to max. 11 m³/h
Page 174

TOP 71
Performance: up to max. 10 m³/h
Page 176

TOP 72-80
Performance: up to max. 21.5 m³/h
Page 178

TOP 90-300
Performance: up to max. 48 m³/h
Page 180

TOP 57-59

Submersible pumps

Field of application
- Cellar drainage
- Pump shaft drainage
- Wastewater disposal
- Handling rainwater
- Handling ground water

Design
Completely submersible pump made from corrosion-resistant plastic/stainless steel. Motor with built-in thermal overload protection. Wired ready for connection with 10 m cable and shock proof plug.
WS = single phase motor 1~ 230 V, with float switch

Motor
Protection class	IP 68
Class of insulation	F
Voltage	1~ 230 V ± 10 %
Speed	2800 rpm
Frequency	50 Hz

Technical data
Flow rate	Q up to max. 11 m³/h
Total dynamic head	H up to max. 11 mWs
Fluid temperature	t up to max. 40 °C
Impeller grain size	10 mm

Pumped fluid
Pure, cloudy or slightly contaminated water without long fibre components.

Materials used
Pump housing	polypropylene
Impeller	PA6
Motor housing	stainless steel AISI 304
Shaft	stainless steel AISI 304
Mechanical seal	carbon/ceramic/NBR
Cable	H07RN-F

Type key
TOP 57 WS

TOP	pump type
57	pump size
WS	with float switch

TOP 57-59

Characteristics

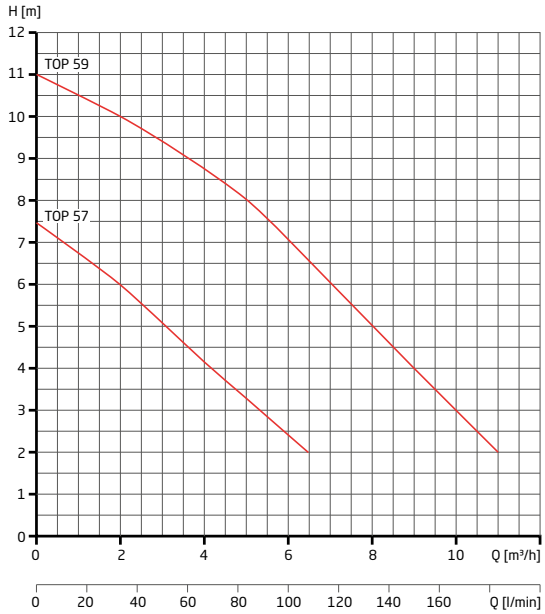

Dimensions

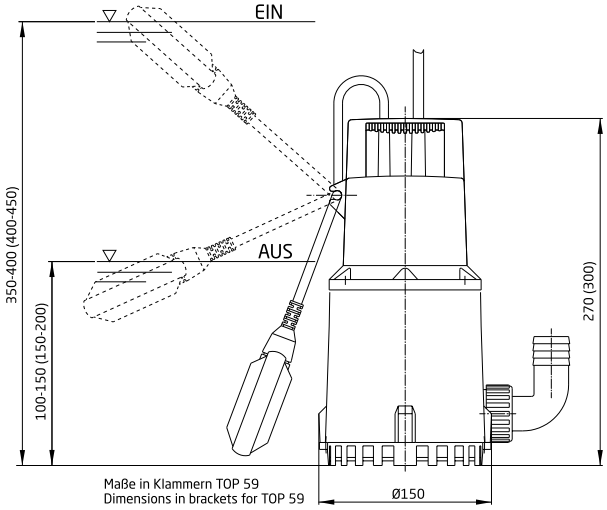

Technical data

Type	Pipe connection 90° elbow	Power output P_2 (kW)	Rated current (A) 1~ 230 V	Weight (kg)
TOP 57 WS	R 1 ¼/socket DN 32	0.13	1.30	4.70
TOP 59 WS	R 1 ¼/socket DN 32	0.43	3.70	6.30

Order information

Type	Article no.	Net RRP	Gross RRP
TOP 57 WS	632.5700.038	**189.92 €**	226.00 €
TOP 59 WS	632.5900.038	**242.02 €**	288.00 €
Non-return valve KS 1¼	632.1700.770	**15.63 €**	18.60 €

TOP 71

Submersible pumps

Field of application
– Cellar drainage
– Pump shaft drainage
– Wastewater disposal
– Handling rainwater
– Handling ground water

Design
Completely submersible pump made from stainless steel. Motor with built-in thermal overload protection (single phase motors). Wired ready for connection with 10 m cable and shock proof plug (single phase motors), with free cable end (three phase motors).

W = single phase motor 1~ 230 V, without float switch
WS = single phase motor 1~ 230 V, with float switch
D = three phase motor 3~ 400 V, without float switch

Motor
Protection class	IP 68
Class of insulation	F
Voltage	1~ 230 V ± 10 % 3~ 400 V ± 10 %
Motor speed	2800 rpm
Frequency	50 Hz

Technical data
Flow rate	Q up to max. 10 m³/h
Total dynamic head	H up to max. 9 mWs
Fluid temperature	t up to 50 °C
Impeller grain size	10 mm

Pumped fluid
Pure, cloudy or slightly contaminated water without long fibre components.

Materials used
Pump and outer housing	stainless steel AISI 304
Impeller	stainless steel AISI 304
Intake grille	stainless steel AISI 304
Pump shaft	stainless steel AISI 303
Motor housing	stainless steel AISI 304
Shaft	stainless steel AISI 304
Shaft seal	mechanical seal
O-rings	NBR
Shaft end in fluid	stainless steel AISI 303
Cable	H07RN8-F

Type key
TOP 71 WS

TOP	pump type
71	pump size
W	motor design, single phase
S	with float switch

TOP 71

Characteristics

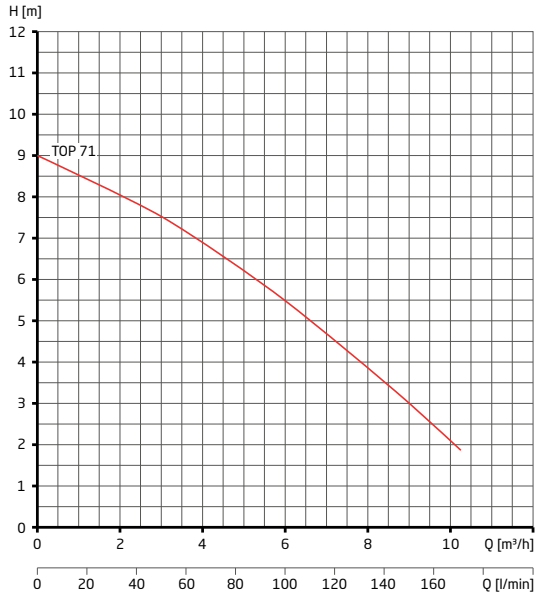

Dimensions

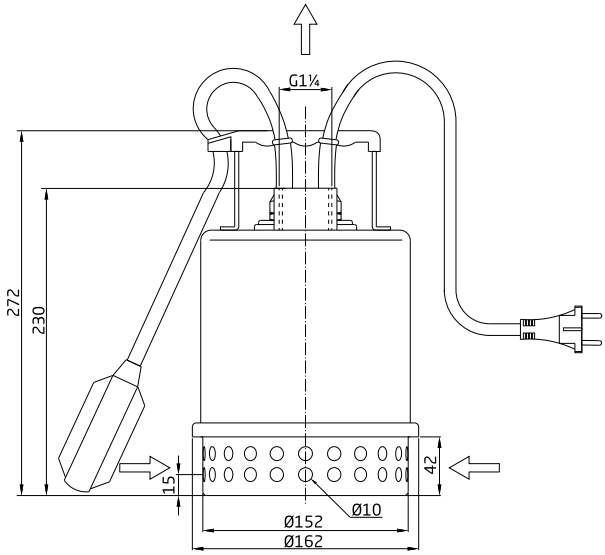

Technical data

Type	Pipe connection (Rp)	Power output P_2 (kW)	Rated current (A) 3~ 400 V	Rated current (A) 1~ 230 V	Weight (kg)
TOP 71 W/WS	1 ¼	0.25	-	2.20	5.10/5.90
TOP 71 D	1 ¼	0.25	0.93	-	5.10

Order information

Type	Article no.	Net RRP	Gross RRP
TOP 71 W	642.0100.408	**331.93 €**	395.00 €
TOP 71 WS	642.0100.418	**345.38 €**	411.00 €
TOP 71 D	642.0100.407	**335.29 €**	399.00 €
Flat suction device	642.0199.000	**49.58 €**	59.00 €
Float holder	600.0000.036	**76.22 €**	90.70 €

TOP 72-80

Submersible pumps

Field of application
– Cellar drainage
– Pump shaft drainage
– Wastewater disposal
– Handling rainwater
– Handling ground water

Design
Completely submersible pump made from stainless steel. Motor with built-in thermal overload protection (single phase motors). Wired ready for connection with 10 m cable and shock proof plug (single phase motors), with free cable end (three phase motors).
W = single phase motor 1~ 230 V, without float switch
WS = single phase motor 1~ 230 V, with float switch
D = three phase motor 3~ 400 V, without float switch

Motor
Protection class ..... IP 68
Class of insulation ..... F
Voltage ..... 1~ 230 V ± 10 %
3~ 400 V ± 10 %
Motor speed ..... 2800 rpm
Frequency ..... 50 Hz

Technical data
Flow rate ..... Q up to max. 21.5 m³/h
Total dynamic head ..... H up to max. 19 mWs
Fluid temperature ..... t up to max. 50 °C
Impeller grain size ..... 10 mm

Pumped fluid
Pure, cloudy or slightly contaminated water without long fibre components.

Materials used
Pump and outer housing ..... stainless steel AISI 304
Impeller ..... stainless steel AISI 304
Intake grille ..... stainless steel AISI 304
Pump shaft ..... stainless steel AISI 303
Motor housing ..... stainless steel AISI 304
Shaft ..... stainless steel AISI 304
Shaft seal ..... 2 seals in oil tank
O-rings ..... NBR
Shaft end in fluid ..... stainless steel AISI 303
Cable H07RN8-F

Type key
TOP 72 WS
TOP ..... pump type
72 ..... pump size
W ..... motor design, single phase
S ..... with float switch

TOP 72-80

Characteristics

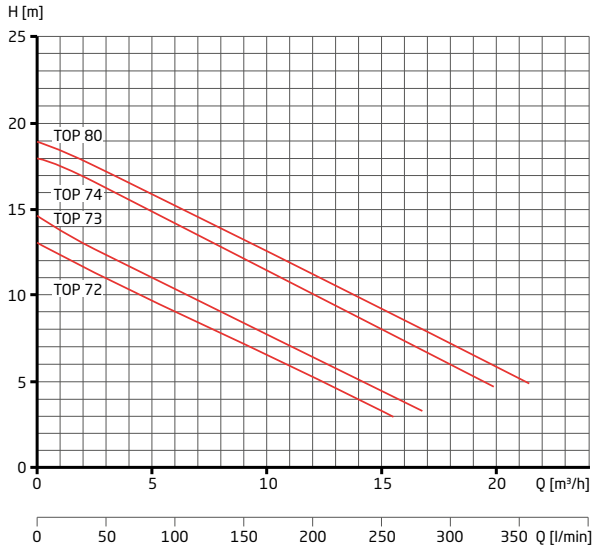

Dimensions

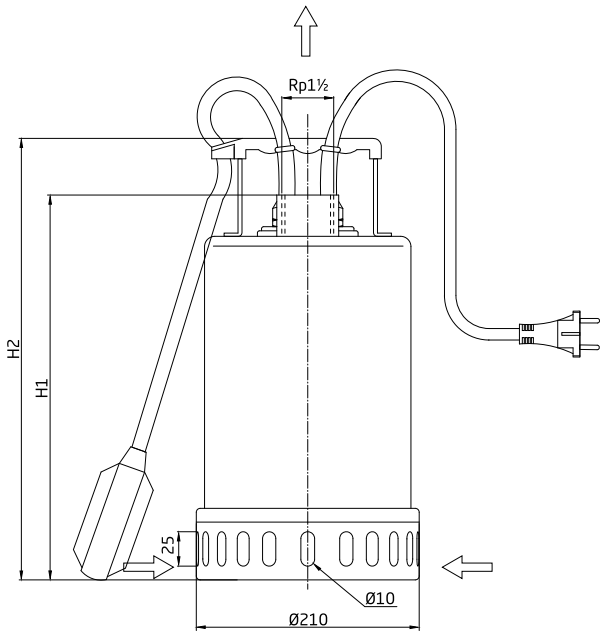

Technical data

Type	Pipe connection (Rp)	Power output P_2 (kW)	Rated current (A) 3~ 400 V	Rated current (A) 1~ 230 V	H1 (mm)	H2 (mm)	Weight (kg)
TOP 72 D	1 ½	0.55	2.00	-	315	352	12.00
TOP 72 W/WS	1 ½	0.55	-	4.40	315	352	12.00/12.20
TOP 73 D	1 ½	0.75	2.40	-	315	352	12.70
TOP 73 W/WS	1 ½	0.75	-	5.60	315	352	12.70/12.90
TOP 74 D	1 ½	1.10	3.60	-	340	377	13.80
TOP 74 W/WS	1 ½	1.10	-	8.20	340	377	13.80/14.00
TOP 80 D	1 ½	1.50	4.20	-	340	377	14.50

Order information

Type	Article no.	Net RRP	Gross RRP
TOP 72 D	642.0200.007	**505.88 €**	602.00 €
TOP 72 W	642.0200.008	**484.03 €**	576.00 €
TOP 72 WS	642.0200.018	**497.48 €**	592.00 €
TOP 73 D	642.0300.007	**545.38 €**	649.00 €
TOP 73 W	642.0300.008	**538.66 €**	641.01 €
TOP 73 WS	642.0300.018	**559.66 €**	666.00 €
TOP 74 D	642.0400.007	**559.66 €**	666.00 €
TOP 74 W	642.0400.008	**554.62 €**	660.00 €
TOP 74 WS	642.0400.018	**577.31 €**	687.00 €
TOP 80 D	642.0500.007	**585.71 €**	697.00 €

TOP 90-300

Submersible pumps

Field of application
- Cellar drainage
- Pump shaft drainage
- Wastewater disposal
- Handling rainwater
- Handling ground water

Design
Completely submersible pump made from stainless steel. Motor with built-in thermal overload protection (single phase motors). Wired ready for connection with 10 m cable and shock proof plug (single phase motors), with free cable end (three phase motors).
WS = single phase motor 1~ 230 V, with float switch
D = three phase motor 3~ 400 V, without float switch
VOX= open impeller

Motor
Protection class	IP 68
Class of insulation	F
Voltage	1~ 230 V ± 10 % 3~ 400 V ± 10 %
Motor speed	2800 rpm
Frequency	50 Hz

Technical data
Flow rate	Q up to max. 48 m³/h
Total dynamic head	H up to max. 17 mWs
Fluid temperature	t up to max. 40 °C
Impeller grain size	50 mm

Pumped fluid
Pure water, sewage or slightly contaminated water without long fibre components.

Materials used
Pump and outer housing	stainless steel AISI 304
Impeller	stainless steel AISI 304
Pump shaft	stainless steel AISI 303
Shaft seal	2 seals in oil tank
O-rings	NBR
Seal carrier	stainless steel AISI 304
Motor spacer ring	cast iron (TOP 300)
Cable	H07RN8-F

Type key
TOP 90 WS VOX

TOP	pump type
90	pump size
WS	motor design, single phase incl. float switch
VOX	open impeller

TOP 90-300

Characteristics

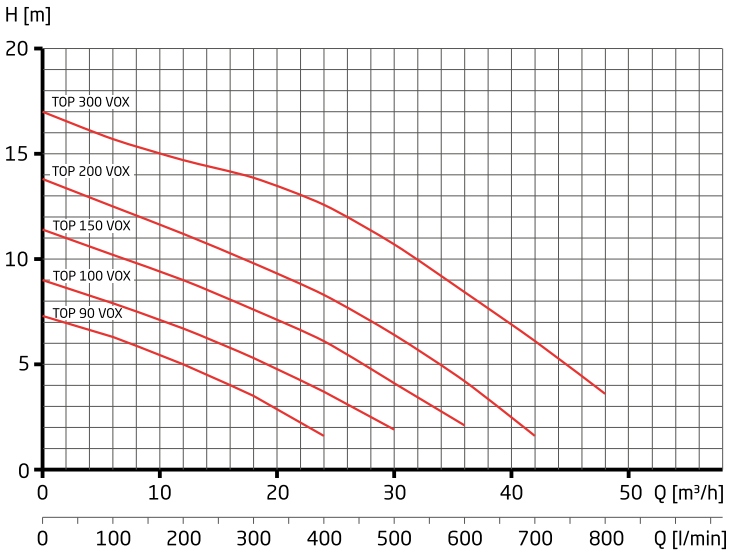

Dimensions

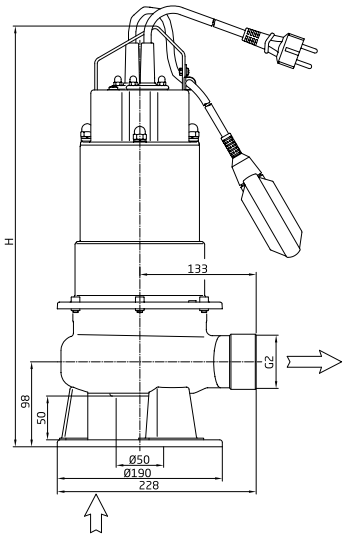

Technical data

Type	Pipe connection (G)	Power output P_2 (kW)	Rated current (A) 3~ 400 V	Rated current (A) 1~ 230 V	H (mm)	Weight (kg)
TOP 90 D VOX	2	0.55	1.40	-	486	16.00
TOP 90 WS VOX	2	0.55	-	3.90	486	16.20
TOP 100 D VOX	2	0.75	2.10	-	486	18.00
TOP 100 WS VOX	2	0.75	-	5.80	516	18.20
TOP 150 D VOX	2	1.10	2.80	-	516	20.00
TOP 150 WS VOX	2	1.10	-	7.30	516	20.20
TOP 200 D VOX	2	1.50	3.30	-	516	20.00
TOP 300 D VOX	2	2.20	4.40	-	546	26.00

Order information

Type	Article no.	Net RRP	Gross RRP
TOP 90 D VOX	642.2075.107	**751.26 €**	894.00 €
TOP 90 WS VOX	642.2075.118	**771.43 €**	918.00 €
TOP 100 D VOX	642.2100.107	**892.44 €**	1,062.00 €
TOP 100 WS VOX	642.2100.118	**905.04 €**	1,077.00 €
TOP 150 D VOX	642.2150.107	**1,195.80 €**	1,423.00 €
TOP 150 WS VOX	642.2150.118	**1,205.88 €**	1,435.00 €
TOP 200 D VOX	642.2200.107	**1,387.39 €**	1,651.00 €
TOP 300 D VOX	642.2300.107	**1,825.21 €**	2,172.00 €

HEATING

Heating water circulation 184

Domestic warm water circulation 192

Heating water circulation

Product overview

INOVA NH Heating circulation pumps
Performance: up to 4.8 m³/h
Page 186

INOVA ND Heating circulation pumps
Performance: up to 4 m³/h
Page 190

NEW

INOVA NH II

Heating circulation pumps

Field of application
– Warm water heating for all systems
– For one and two family houses
– Industrial circulation units
– Air conditioning units
– Closed cooling circuits

Design
Wet rotor circulation pump with blocking-current proof synchronous motor and integrated electronic control for stepless performance adaptation. Either Δp-c (constant differential pressure), Δp-v (variable differential pressure) or constant speed with three stages.

NH:
– Standard high-efficiency pump
– Control module with LED display for simple adjustment of the set values and the type of control
– Display of the current power consumption
– ErP conform, EEI ≤ 0.20
– Min. power consumption only 4 W
– Self-ventilating
– Faster electronic connection via connector plug
– Including heat insulation shell

Motor
Protection class ..... IP X2D
Class of insulation ..... F
Voltage ..... 1~ 230 V ± 10 %
Motor speed ..... 2850 rpm
Frequency ..... 50 Hz

Technical data
Flow rate ..... Q up to max. 4.8 m³/h
Total dynamic head ..... H up to max. 6 mWs
Fluid temperature ..... -10 °C to max. 95 °C
Operating pressure ..... p up to max. PN 6

Pumped fluid
Heating water according to VDI 2035.
Water/glycol mixture in maximum ratio 1:1.

Materials used
Pump housing ..... EN-GJL 200 (cast iron)
Impeller ..... plastic
Pump shaft ..... stainless steel
Plain bearing ..... carbon, metal impregnated
O-rings ..... EPDM
Can ..... stainless steel

Type key
INOVA NH II 25/60
INOVA ..... circulation pump
NH II ..... pump type
25 ..... pipework dimension
60 ..... max. dynamic head

INOVA NH II

Δp-c characteristics

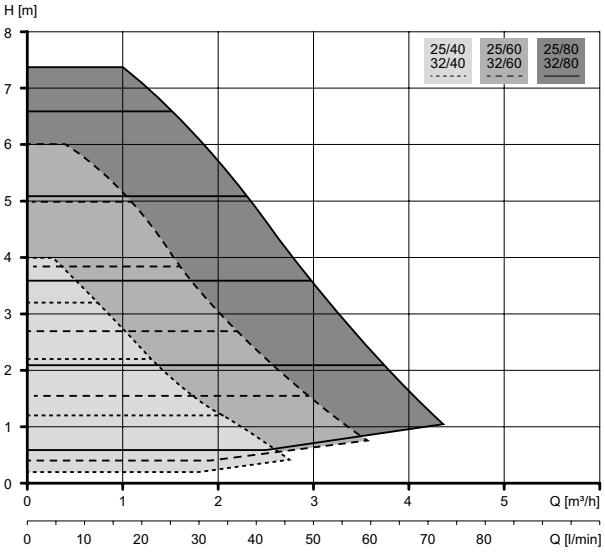

Δp-c characteristics

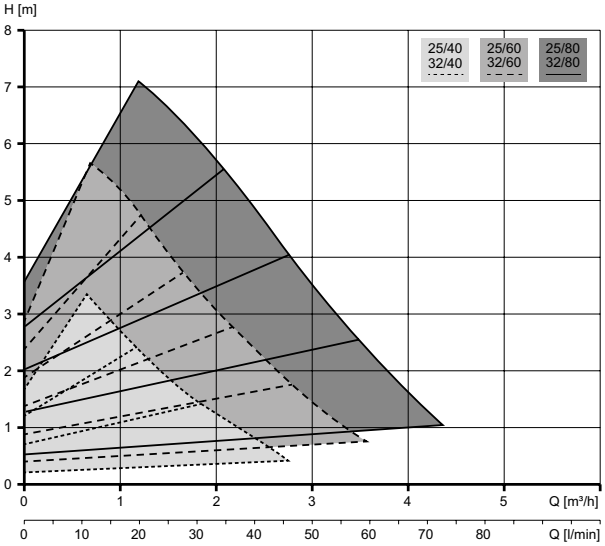

Characteristics constant speed with three stages

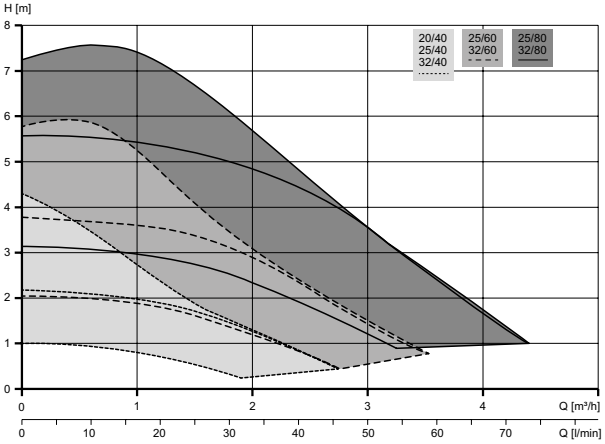

INOVA NH II

Technical data

Type	Pipe fittings	Thread	Installation length (mm)	Energy efficiency index EEI	Min-max power consumption (W)	Rated current Imax. 1~ 230 V (A)	Weight (kg)
NH II 20/40	¾ oder 1	1 ½	130	EEI ≤ 0.20-Part 2	4 - 20	0.26	2.30
NH II 25/40	1	1 ½	180	EEI ≤ 0.20-Part 2	4 - 20	0.26	2.30
NH II 32/40	1 ¼	2	180	EEI ≤ 0.20-Part 2	4 - 20	0.26	2.40
NH II 25/60	1	1 ½	180	EEI ≤ 0.20-Part 2	4 - 40	0.44	2.30
NH II 32/60	1 ¼	2	180	EEI ≤ 0.20-Part 2	4 - 40	0.44	2.40
NH II 25/80	1	1 ½	180	EEI ≤ 0.23-Part 2	4 - 75	0.70	2.30
NH II 32/80	1 ¼	2	180	EEI ≤ 0.23-Part 2	4 - 75	0.70	2.50

Order information

Type	Article no.	Net RRP	Gross RRP
NH II 20/40	663.2040.238	**259.66 €**	309.00 €
NH II 25/40	663.2540.238	**259.66 €**	309.00 €
NH II 32/40	663.3240.238	**270.59 €**	322.00 €
NH II 25/60	663.2560.238	**289.08 €**	344.00 €
NH II 32/60	663.3260.238	**299.16 €**	356.00 €
NH II 25/80	663.2580.238	**363.03 €**	432.00 €
NH II 32/80	663.3280.238	**373.11 €**	444.00 €
Angled connector (optional)	659.0000.003	**21.60 €**	25.70 €

INOVA NH II

Dimensions

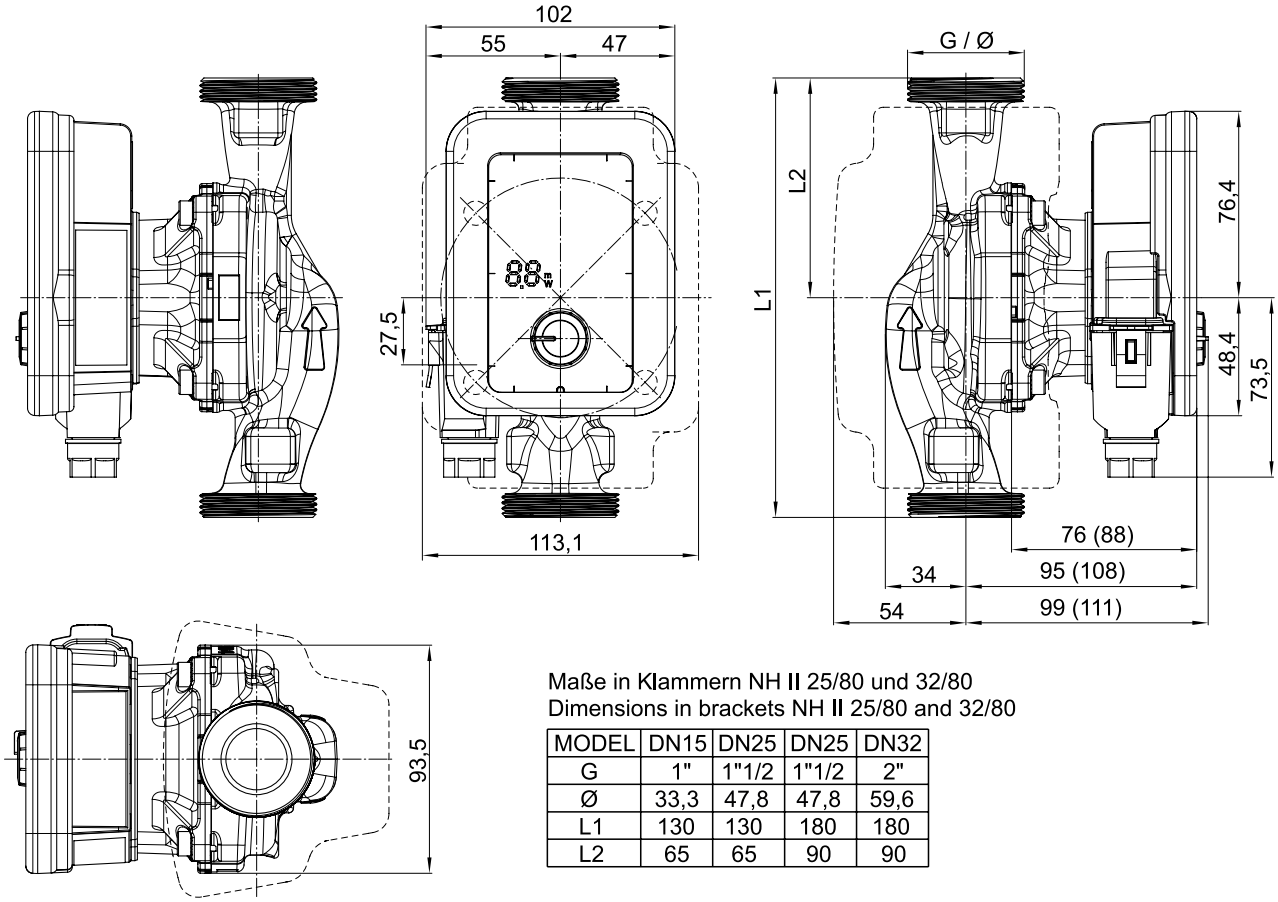

Maße in Klammern NH II 25/80 und 32/80
Dimensions in brackets NH II 25/80 and 32/80

MODEL	DN15	DN25	DN25	DN32
G	1"	1"1/2	1"1/2	2"
Ø	33,3	47,8	47,8	59,6
L1	130	130	180	180
L2	65	65	90	90

INOVA ND

Heating circulation pumps

Einsatzgebiete
– Warmwasserheizungen aller Systeme
– Speziell für Ein- und Zweifamilienhäuser
– Industrielle Umwälzanlagen
– Klimaanlagen
– Geschlossene Kühlkreisläufe

Ausführung
Wet rotor circulation pump with blocking-current proof synchronous motor and integrated electronic control for stepless performance adaptation. Either Δp-c (constant differential pressure) or Δp-v (variable differential pressure).
ND:
– Premium high-efficiency pump
– Control module with LED display for simple adjustment of the set values and the type of control
– ErP conform, EEI ≤ 0.20
– Min. power consumption only 3 W
– Display of the current and overall power consumption
– Pump ventilation routine
– Faster electronic connection via connector plug
– Autopilot function allows further optimisation of the energy consumption
– Including thermal insulation shell

Motor
Protection class ..... IP X4D
Class of insulation ..... F
Voltage ..... 1~ 230 V ± 10 %
Motor speed ..... 2850 rpm
Frequency ..... 50 Hz

Technical data
Flow rate ..... Q up to max. 4 m³/h
Total dynamic head ..... H up to max. 6 mWs
Fluid temperature ..... 2 °C to max. 110 °C (at +25 °C max. ambient temperature)
Operating pressure ..... p up to max. PN 10

Pumped fluid
Heating water according to VDI 2035.
Water/glycol mixture in maximum ratio 1:1.

Materials used
Pump housing ..... EN-GJL 200 (cast iron)
Impeller ..... plastic
Pump shaft ..... stainless steel
Plain bearing ..... Carbon, metal impregnated
O-rings ..... EPDM
Can ..... stainless steel

Type key
INOVA ND 25/40
INOVA ..... circulation pump
ND ..... pump type
25 ..... pipework dimension
40 ..... max. dynamic head

INOVA ND

Characteristics

Δp-c

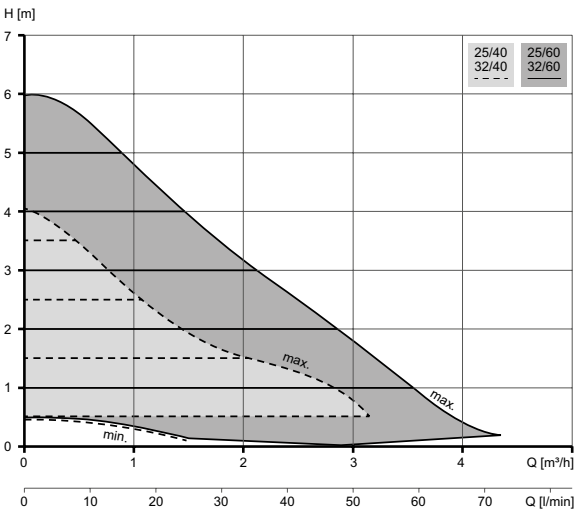

Δp-v

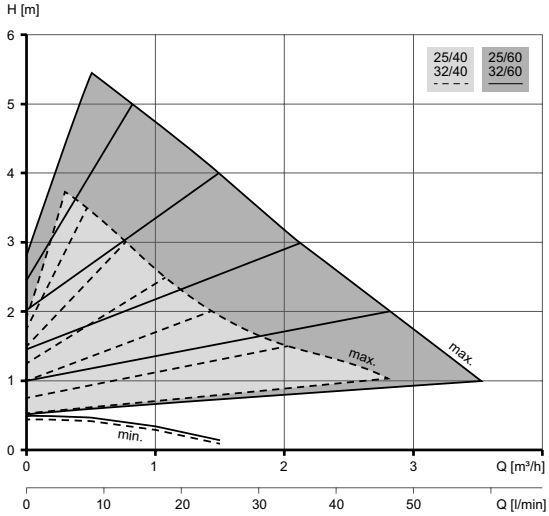

Technical data

Type	Pipe fittings	Thread	Installation length (mm)	Energy efficiency-index EEI	Min - max power consumption (W)	Rated current Imax. 1~ 230 V (A)	Weight (kg)
ND 25/40	1	1 ½	180	EEI ≤ 0,20-Part 2	3 - 25	0,33	2,30
ND 32/40	1 ¼	2	180	EEI ≤ 0,20-Part 2	3 - 25	0,33	2,40
ND 25/60	1	1 ½	180	EEI ≤ 0,20-Part 2	3 - 40	0,44	2,30
ND 32/60	1 ¼	2	180	EEI ≤ 0,20-Part 2	3 - 40	0,44	2,40

Order information

Type	Article no.	Net RRP	Gross RRP
ND 25/40	663.2540.038	349.58 €	416.00 €
ND 32/40	663.3240.038	359.66 €	428.00 €
ND 25/60	663.2560.038	382.35 €	455.00 €
ND 32/60	663.3260.038	391.60 €	466.00 €
Angled connector (optional)	659.0000.003	21.60 €	25.70 €

Dimensions

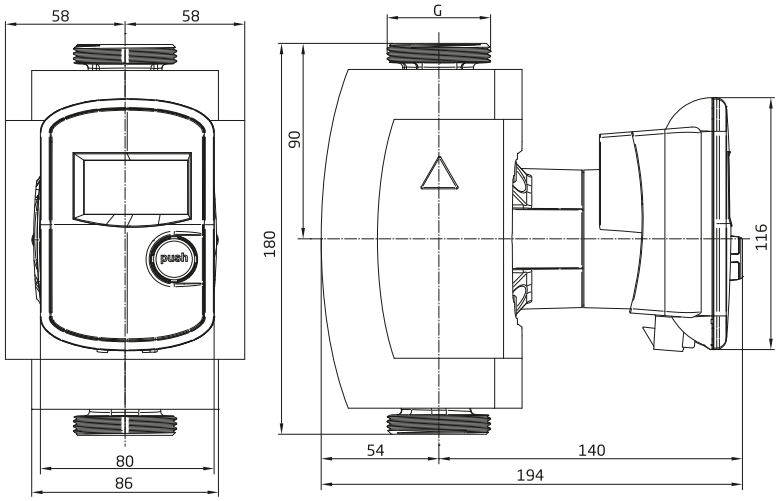

Domestic warm water circulation

Product overview

Process water pump BN
Performance: up to 0.4 m^3/h
Page 194

BN

Process water pumps

Field of application
– Drinking water circulation systems

Design
Wet rotor circulation pump with screwed connection, blocking-current proof synchronous motor.
– Low power consumption from 3 to 4.5 W thanks to synchronous motor
– Application up to max. 20° dH
– Faster electronic connection via connector plug
– High quality materials to protect against bacteria and corrosion
– Flexible service motor: fast replacement for common pump types
– including thermal insulation shell
– including non-return valve and ball stop valve

Motor
Protection class	IP 42
Class of insulation	F
Voltage	1~ 230 V ± 10 %
Motor speed	2850 rpm
Frequency	50 Hz

Technical data
Flow rate	Q up to max. 0.4 m³/h
Total dynamic head	H up to max. 1.0 mWs
Fluid temperature	t 2 °C to max. 65 °C
Operating pressure	p up to max. 10 bar

Pumped fluid
Drinking water up to 20° dH

Materials used
Pump housing	brass
Impeller	plastic
Pump shaft	stainless steel
Plain bearing	carbon, synthetic resign impregnated
O-rings	EPDM
Can	stainless steel

Type key
BN 10 A

BN	pump type
10	pump size
A	ball stop valve and non-return valve

BN

Characteristics

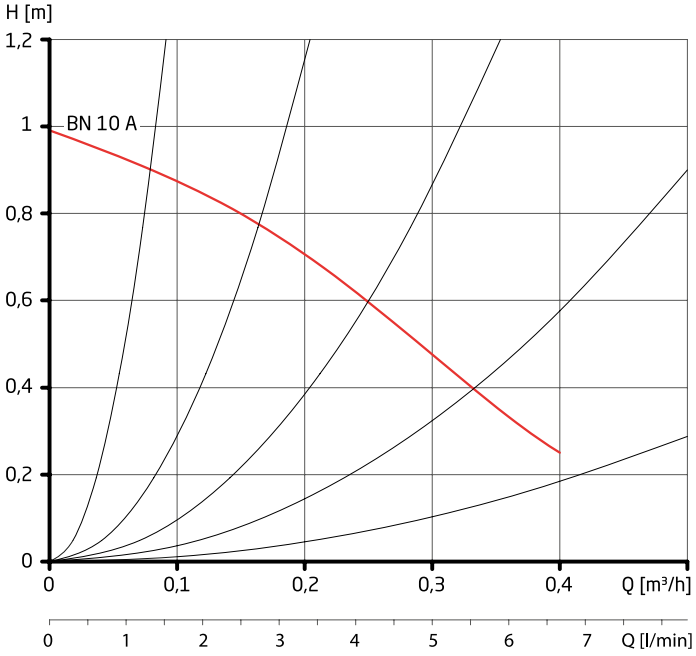

Technical data

Type	Pipe fittings	Thread	Installation length (mm)	Energy efficiency index EEI	Power consumption (W)	Rated current Imax. (A) 1~ 230 V	Weight (kg)
BN 10 A	R ½	1	138	EEI ≤ 0.20	3 - 5	0.05	1.30

Order information

Type	Article no.	Net RRP	Gross RRP
BN 10 A	651.1000.038	**202.52 €**	241.00 €
Angled connector (optional)	659.0000.003	**21.60 €**	25.70 €

Dimensions

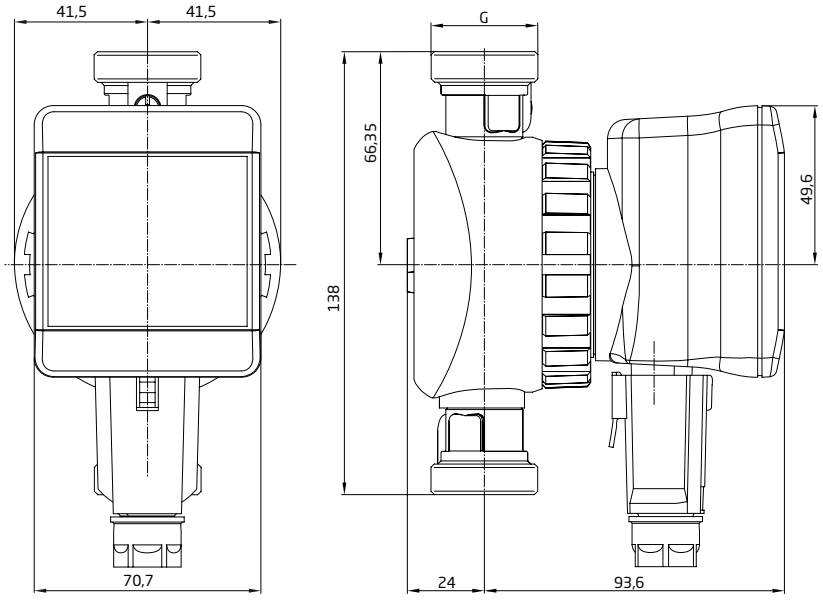

SPECK FOR YOU

Quality is the reason customers buy SPECK Pumpen products.

Service is the reason customers are always happy with SPECK Pumpen.

Our aim is always to give more than you expect.

That's why we're always there for you with help and solutions,

from planning to implementation and of course with our

after sales service including customer and repair services.

Reliable, fast and local ...

SERVICE

Offices in Germany 198

Contact . Imprint 199

LOCATIONS

Germany

SAXONY, THURINGIA, SAXONY-ANHALT, SOUTHERN BRANDENBURG

SPECK Pumpen branch office

Uranus 1 a
09456 Annaberg-Buchholz
Phone 49 3733 6765393
Fax +49 3733 6799879
annaberg@speck-pumps.com
speck-pumps.com

NORTH RHINE-WESTPHALIA, RHINELAND-PALATINATE NORTH

SPECK Pumpen representation
Klaus Schober
Volmerswerther Straße 86
40221 Düsseldorf
Phone +49 211 30200760
Fax +49 211 30200769
info@speck-schober.de
speck-schober.de

SOUTHERN BAVARIA

SPECK Pumpen branch office

Lindberghstraße 7
82178 Puchheim
Phone +49 89 6701008
Fax +49 89 6706071
muenchen@speck-pumps.com
speck-pumps.com

BERLIN, MECKLENBURG-WESTERN POMERANIA, BRANDENBURG

SPECK Pumpen representation
Rolf Sussujew
Hoppegartener Straße 70 c
15366 Hoppegarten
Phone +49 3342 422535
Fax +49 3342 422536
info@paf-s.de
speck-pumps.com

HESSE, RHINELAND-PALATINATE SOUTH, SAARLAND

SPECK Pumpen branch office

Philipp-Reis-Straße 5
63110 Rodgau-Jügesheim
Phone +49 6106 285780
Fax +49 6106 2857829
rodgau@speck-pumps.com
speck-pumps.com

NORTHERN AND EASTERN BAVARIA

SPECK Pumpen branch office

Hauptstraße 3
91233 Neunkirchen am Sand
Phone +49 9123 949235
Fax +49 9123 949245
neunkirchen@speck-pumps.com
speck-pumps.com

HAMBURG, SCHLESWIG-HOLSTEIN, BREMEN, LOWER SAXONY

SPECK Pumpen branch office

Farmsener Landstraße 2
22359 Hamburg
Phone +49 40 61193250
Fax +49 40 61193249
hamburg@speck-pumps.com
speck-pumps.com

BADEN-WUERTTEMBERG

SPECK Pumpen branch office

Löwen-Markt 5
70499 Stuttgart
Phone +49 711 3419010
Fax +49 711 34190118
stuttgart@speck-pumps.com
speck-pumps.com

CONTACT

We‘re happy to help ...

SALES

BADU swimming pool technology
Phone +49 9123 949-400
Fax +49 9123 949-206
info@badu.de

Domestic technology
Phone +49 9123 949-500
Fax +49 9123 949-211
vertrieb@speck-pumps.com

Industrial technology
Phone +49 9123 949-600
Fax +49 9123 949-204
vertrieb@speck-pumps.com

DISTRIBUTION

Phone +49 9123 949-900
Fax +49 9123 949-316
versand@speck-pumps.com

EXPORT

Phone +49 9123 949-800
Fax +49 9123 949-316
m.plan@speck-pumps.com

CUSTOMER SERVICES, REPAIRS AND SPARE PARTS SERVICES

Phone +49 9123 949-700
Fax +49 9123 949-245
service@speck-pumps.com

MARKETING AND DOCUMENTATION

Documentation, brochures, image material
Phone +49 9123 949-242
Fax +49 9123 949-284
werbung@speck-pumps.com

speck-pumps.com **YouTube.com** **facebook.com** **twitter.com**

Prices valid from 1 January 2020.
Previous prices are therefore no longer valid.

Carriage paid and packaging included on orders within Germany from a net order value of 1,500.00 €.

IMPRINT

Editor
SPECK Pumpen Verkaufsgesellschaft GmbH
Hauptstraße 3
91233 Neunkirchen am Sand, Germany
Phone +49 9123 949-0
info@speck-pumps.com
speck-pumps.com

Editorial and content
Andreas Politaj, Dieter Schäfczuk, Kerstin Rüll, Armin Bayer, Ramona Erb
Translation
Gemma Snowden
Illustrations
Ramona Erb, Armin Bayer, Tim Neumüller

Printing, including extracts, only with the editor's authorisation. Subject to technical modifications and errors.

Copyright by SPECK Pumpen.

Content

A

Accessories extinguishing water supply 39
Accessories water extraction 135
Aquacell AE-M 6
Aquacell A/AE 8

B

Borehole pumps 106
Borehole pumps SUPS 3 106
Borehole pumps SUPS 4 112
Borehole pumps SUPS 6 124
Borehole pumps ZIS 166
Borehole pumps Zismatic 168
Büffelpumpe BS+domestic waterwork pumps .. 152

C

Centrifugal pumps IN-VB 44
Centrifugal pumps SG/SGM(DA)/Speckmat 162
Controls 94

D

Domestic warm water circulation 192
Drainage 172
Drinking water systems 30

E

Extinguishing water supply systems 30

F

Feuercell II FC 32

G

Grid disconnection systems 30

H

Heating 183
Heating circulation pump INOVA NH II 186
Heating circulation pump INOVA ND 190
Heating water circulation 184
Horizontal pumps 76

M

MTX 86
Multicell 18
Multicell II S2 32

P

Pressure boosting units 4
Process water pump BN 194
Pump controls SPR-I 96
Pump controls SPR-E 98
Pump controls SPR-H 100
Pumpmeister PM + domestic waterwork pumps 148

R

Rainwater utilisation 160

S

Service 197
Side channel pumps SKG 156
Submersible pumps 174
Submersible pumps TOP 57-59 174
Submersible pumps TOP 71 176
Submersible pumps TOP 72-80 178
Submersible pumps TOP 90-300 180

V

Vertical pumps 42
VGX/2VGX 78

W

Water extraction 104
Water supply 3
Water disposal 171

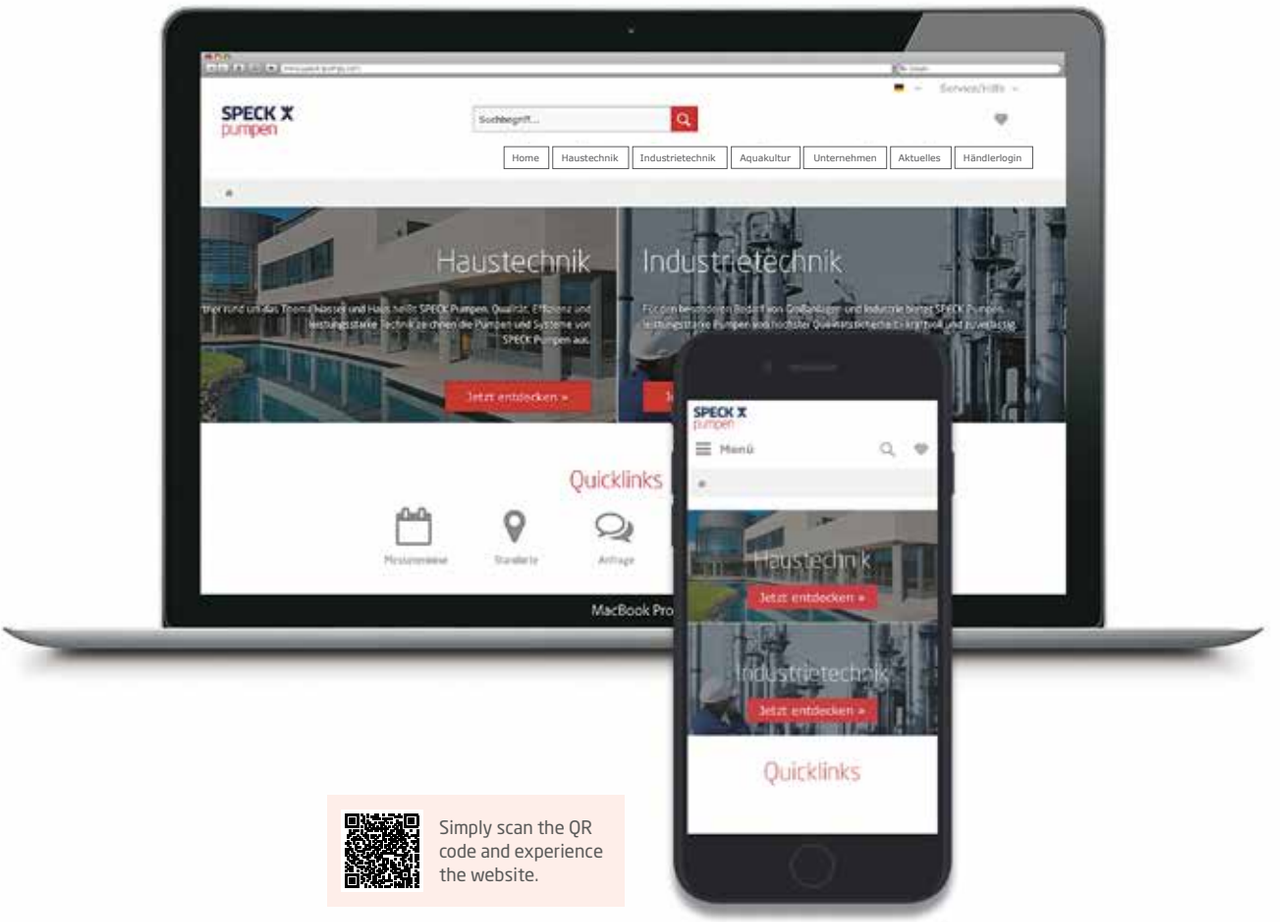

Simply scan the QR code and experience the website.

Experience the world of SPECK Pumpen: online and on the go …

speck-pumps.com

SPECK pumpen

SPECK pumpen

SPECK Pumpen Verkaufsgesellschaft GmbH
91233 Neunkirchen am Sand, Germany

Phone +49 9123 949-0
Fax +49 9123 949-260

info@speck-pumps.com

speck-pumps.com

Your SPECK Pumpen contact

VG 766.0000.013 2.5' 01/20 RE/BA